BRAVILOR BONAMAT

FreshGround (XL) / FreshMore

OPERATING MANUAL



700.470.016 B (Digital manual - English)

Model-no:
- FRSHN4-501
- FRSHN4-502
- FRSHN4-510
- FRSHN4-511
- FRSHN6-101

Original document by manufacturer
version 1.0 | 2025-04-25

All rights reserved.
No part of this document may be copied and/or published by means of printing, photocopying, microfilming or by any other means whatsoever without the prior written consent of the manufacturer. This also applies to the included drawings and/or diagrams.
The information in this document is based on data that was available at the time the design, the material characteristics and the operating methods were published, meaning that this document is subject to change.
The original instructions for this manual have been written in English. Other language versions of this manual are a translation of the original instructions.
For this reason, the instructions are merely a guideline for the installation, maintenance and repair of the machine shown on the front cover.
This document applies to the standard version of this machine.
The manufacturer therefore declines all liability for any damage arising from specifications that deviate from the standard version of the machine delivered to you.
This document has been compiled with the utmost care. However, the manufacturer cannot be held liable for any errors it contains or the consequences thereof.

Table of contents

1. General **1**
2. Parts and functions **1**
2.1 Parts FreshGround 1
2.3 Parts FreshMore 2
2.2 Optional water filter 2
3. Cleaning **3**
3.1 Frequent cleaning (weekly) 3
3.2 Periodic cleaning (monthly) 12

1. General

- ▶ *Always read the safety instructions (700.403.347).*
  To avoid possible damage, these safety instructions must be read, understood and followed.
- ▶ *Manuals are subject to change, scan the QR code to retrieve current information.*

2. Parts and functions

2.1 Parts FreshGround

1. canisters for instant ingredients
2. canister outlet
3. mixing system
4. beverage outlet
5. hot water outlet
6. bean canister
7. grinder outlet
8. brewer
9. filter belt
10. filter roll holder
11. special keys
    11a. service key (door)
    11b. override key (lid / bean canister)
12. USB port
13. program button
14. door key
15. waste bin
16. drip tray with float
17. ventilation system
18. water inlet
19. electrical connection
20. on/off switch

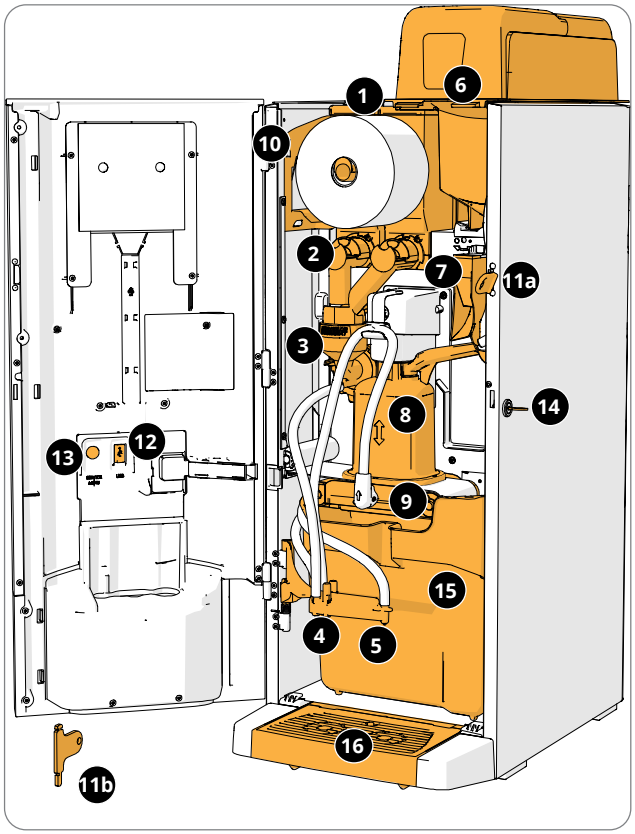



2.3 Parts FreshMore

1. canisters for instant ingredients
2. canister outlet
3. mixing system
4. beverage outlet
5. hot water outlet
6. freshbrew coffee canister
7. outlet for instant coffee
8. brewer
9. filter belt
10. filter roll holder
11. special keys
    11a. service key (door)
    11b. override key (lid)
12. USB port
13. program button
14. door key
15. waste bin
16. drip tray with float
17. ventilation system
18. water inlet
19. electrical connection
20. on/off switch

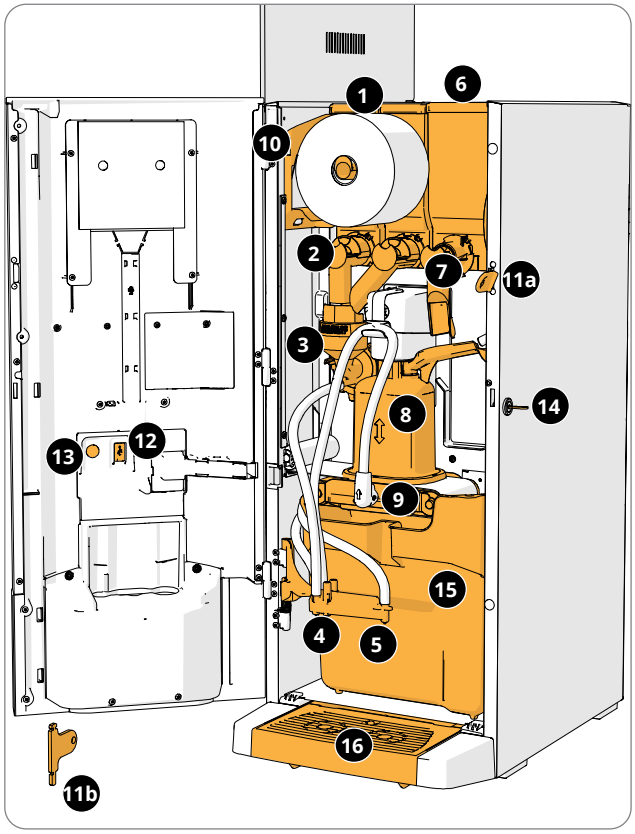



2.2 Optional water filter

To enjoy your beverages even more and improve the performance of your FreshBrew, we recommend installing a water softener filter. You can request one from Bravilor Bonamat BV.

► *When you install a water softener filter you must notify the FreshBrew of its presence as described in XXX<DT>.*

3. Cleaning

It is important that the FreshBrew is kept clean, what can be cleaned *(period depends on pollution)*:

Daily	*Frequently*	*Periodically*
Run the rinse program	Drip-tray on p.3	Cleaning Brewer (after 5000 cups or monthly) on p.9
Empty drip tray	Mixing system on p.3	Ventilation system on p.12
	The outside on p.4	Instant canister and inside on p.12
	Waste bin on p.5	
	Rinse Brewer (after 1200 cups or weekly) on p.6	

▶ *Never clean parts of the FreshBrew in the dishwasher, only if this is explicitly stated.*

▶ *Do not use any aggressive cleaning agents.*

▶ *See also the cleaning programmes in the GUI.*

3.1 Frequent cleaning (weekly)

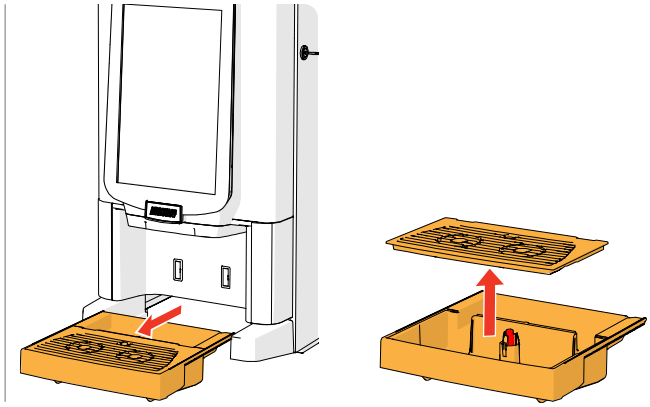

Drip-tray

1. pull the complete drip tray forward
2. empty the drip tray
3. clean the drip tray (including grid), using *hot soapy water*
4. dry everything and place them back in place

▶ *Check whether the "red float" is still in place.*

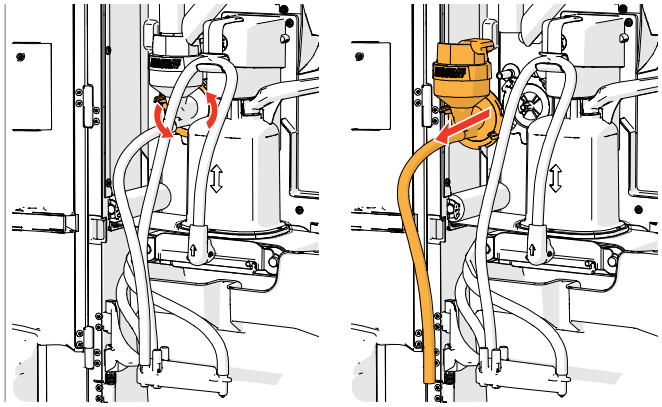

Mixing system

1. open the door and lid
2. turn the fixation ring counter-clockwise
3. remove the complete mixing system

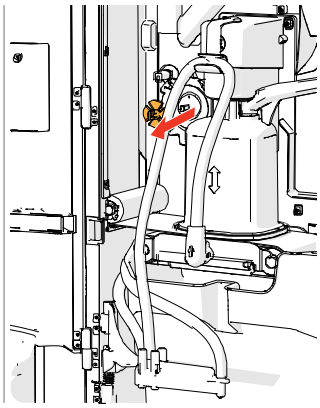

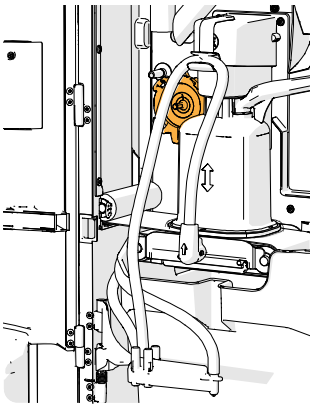

4. remove the mixer
5. clean the indicated parts, using a *damp* cloth

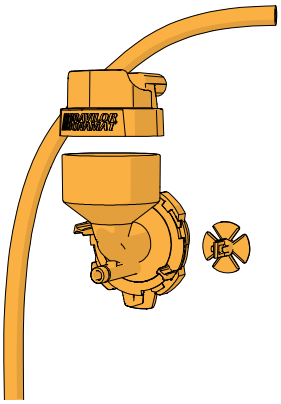

6. clean the removed parts *(dishwasher proof (<65°C))*
7. remount the mixing system in reverse order

▶ *Pay attention to the flat sides of the shaft and the mixer.*

8. reconnect the hose to the mixing system and the outlet
9. close the lid and door

▶ *To prevent clogging of ingredient that has fallen into the mixing cup, it is recommended to rinse the machine after the daily cleaning procedure.*

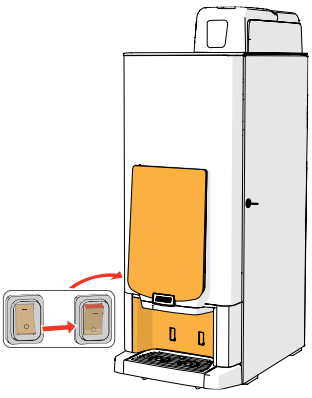

The outside

1. switch off the machine (due to the touchscreen)
2. clean the outside with a *damp* cloth
3. switch the machine back on

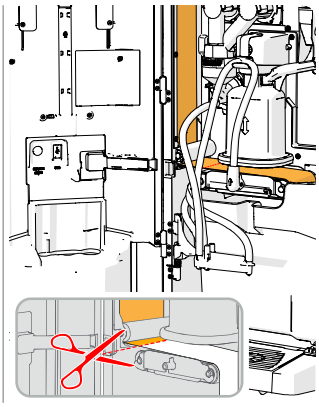

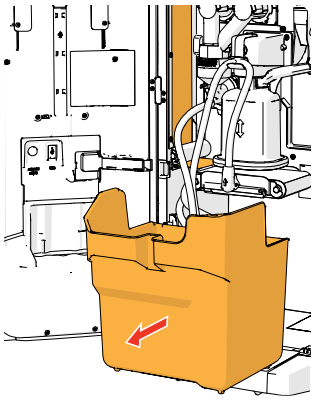

Waste bin

1. open the door
2. cut the filter paper at the indicated location
3. turn the bracket of the beverage outlet towards the door
4. remove the waste bin

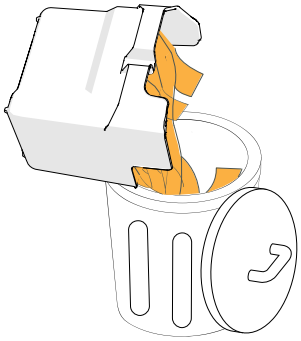

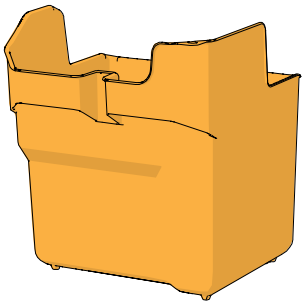

5. empty the waste bin (recyclable)
6. rinse the waste bin with water, use a brush if necessary

Rinse Brewer
(after 1200 cups or weekly)

Necessities:
- Small brush (dry cleaning)
- Large brush (wet cleaning)
- Tube brush
- Running water



- open the door with the key

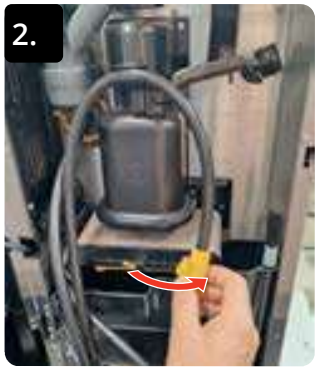

- cut/tear the filter paper on the left side of the machine (if applicable)
- remove the coffee hose from the brewer belt



- remove the filter belt module



- remove the brewer cup



FreshGround
- brush off the coffee ground outlet, with the small brush



FreshMore
- brush off the coffee ground outlet, with the small brush

6.



- remove the filter belt spanner

7.



- remove the filter
- rinse all parts under the faucet to remove larger coffee residues

8.



- brush and rinse the filter belt module under running water

9.



- brush the filter belt spanner under running water

10.



- rinse the filter under running water

11.



- place the filter by placing one end over the roller, then while simultaneously rotating the other roller slowly pull the filter down on the other side with your thumb

12.



- place the filter belt spanner

13.



- rinse the brewer cup seal
- rinse the brewer inlet

14.



- brush and/or rinse the air channel of the brewer cup

15.



- place the brewer cup

16.



- place the filter belt module

17.



- place the brewer hose
- place the filter paper if applicable
- close and lock the door
- remove the key

Cleaning Brewer
(after 5000 cups or monthly)

Necessities:
- 30 grams Bravilor cleaner, 2 bags (30 gram)
- Container with 6 liters of warm water (> 60°C)
- Large brush
- Gloves and safety goggles

1.



- open the door with the key

2.

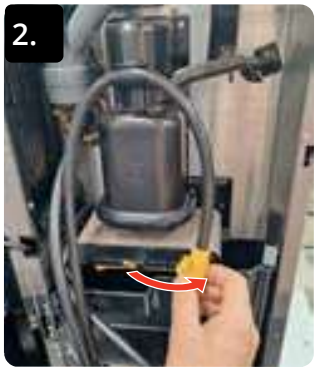

- cut/tear the filter paper on the left side of the machine (if applicable)
- remove the hose from the brewer belt

3.

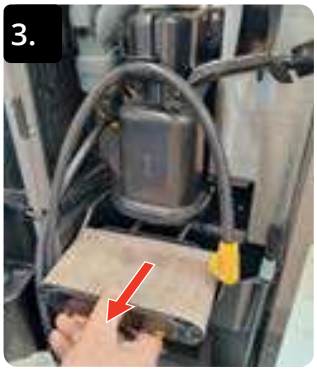

- remove the filter belt module

4.



- remove the brewer cup

5.



- disassemble the brewer inlet (the inlet can be removed by raising it upward)
- rinse under the faucet to remove coffee residues

6.



- remove outlet arm, coffee hose and hot water bypass hose

7.



- remove the filter belt spanner

8.



- remove the filter
- rinse all parts under the faucet to remove larger coffee residues

9.



- dissolve 30 grams of Bravilor Cleaner in 6L. of warm water (> 60°C)

  ▶ *Read the instructions on the sachet of the cleaner.*

10.



- place all the disassembled brewer components, , outlet arm and hoses fully submerged in the solution
- leave the components submerged for a maximum of 30 minutes

11.



- thoroughly brush the filter between your hands *or* replace with a new filter (6.331.734.001)*

  ▶ *Please mind the delicate filter.*
- brush all the components thoroughly with the large brush

12.



- drain the solution

13.



- rinse the components several times to remove the cleaning solution

14.



- place the filter by placing one end over the roller, then while simultaneously rotating the other roller slowly pull the filter down on the other side with your thumb

15.



- place the filter belt spanner

16.

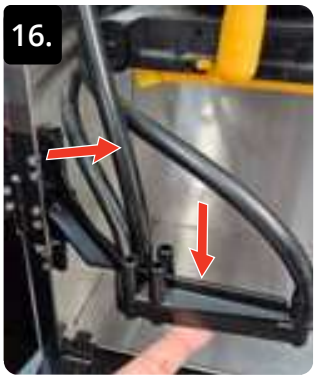

- place the outlet arm, reconnect the hoses
  - » hot water = top connection
  - » coffee bypass = lower connection
- place the brewer inlet
- place the brewer cup

17.



- place the filter belt module

18.



- place the brewer hose
- place the filter paper if applicable
- close and lock the door
- remove the key

*** Note:** If the filter is replaced, reset the filter counter in the GUI.

3.2 Periodic cleaning (monthly)

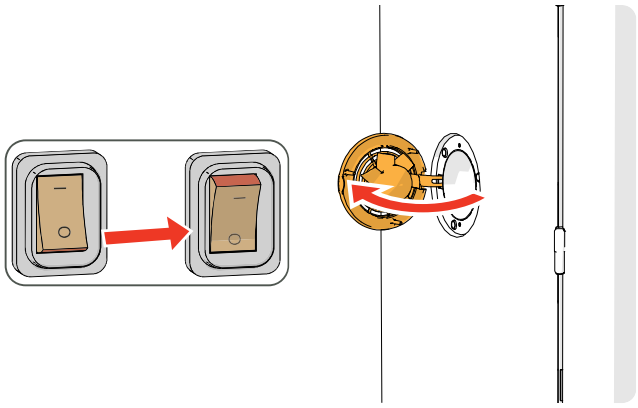

Ventilation system

1. switch off the machine
2. open the fan to the back

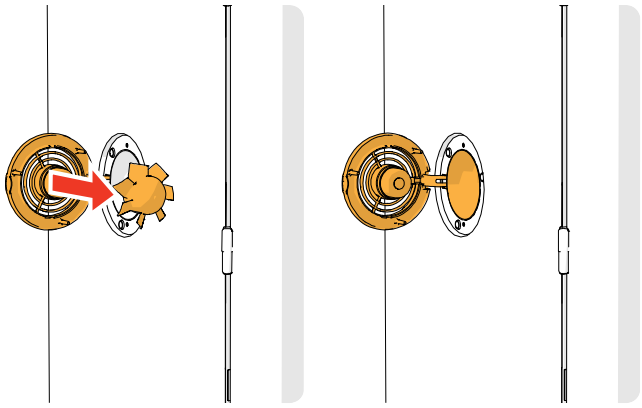

3. carefully pull the rotor of the motor
4. clean the fan housing and grid, using a *damp* cloth

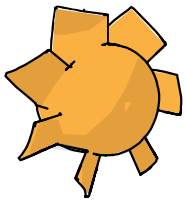

5. clean the fan rotor, using *hot soapy water*
6. dry everything and place the rotor back in place
7. switch the machine back on

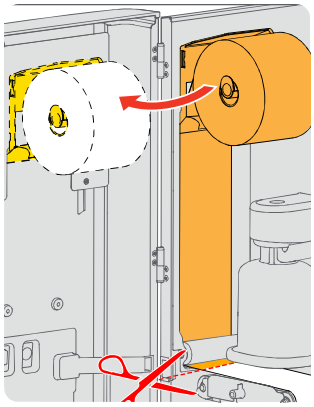

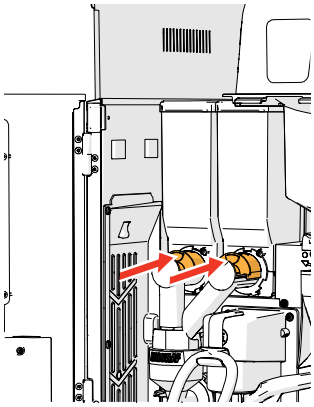

Instant canister(s) and inside

1. open the door and lid
2. cut the filter paper at the indicated location
3. attach the filter paper holder to the door at the position indicated
4. close the “yellow” slider of the canister outlet(s)

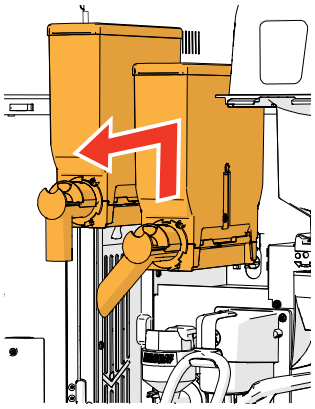

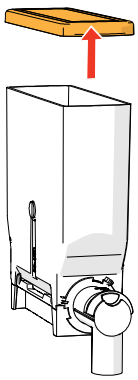

5. take the canister(s) out of the machine
6. remove the lid

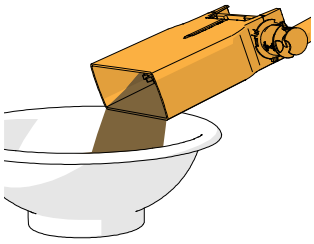

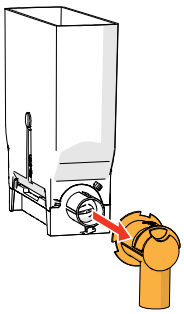

7. pour the ingredients in a dry bowl
8. unlink the outlet from the canister
9. take apart the canister(s)

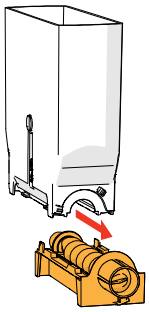

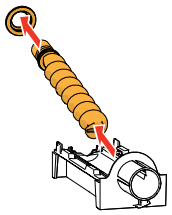

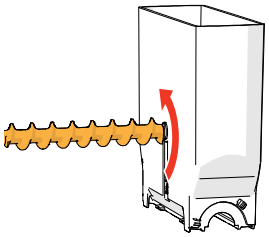

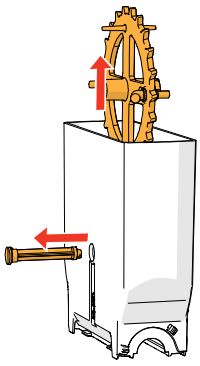

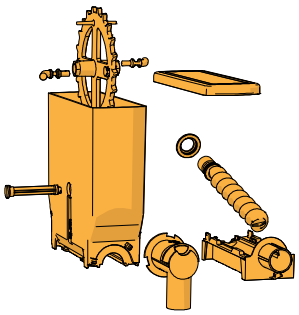

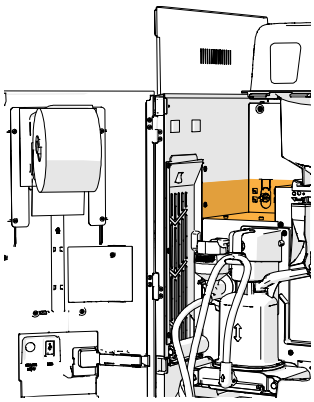

10. clean the canister and outlet with a brush

    ▶ *Do **not** use water to prevent the ingredients from clumping and clogging the canister.*
11. clean the *inside if the machine* with a moist cloth
12. refill the canister(s)
13. replace the canister(s) in its/their correct position
14. open the “yellow” slider of the canister(s)
15. replace the filter roll holder
16. feed the filter paper through the brewer
17. close the lid and door

Brewing
your coffee

SINCE 1948

BRAVILOR BONAMAT

© 2025-04-25 VHH