QUICK REFERENCE GUIDE:
398-CN DISPENSERS

Please follow these tips to get the best performance from your Mustard Dispenser

Assembly:

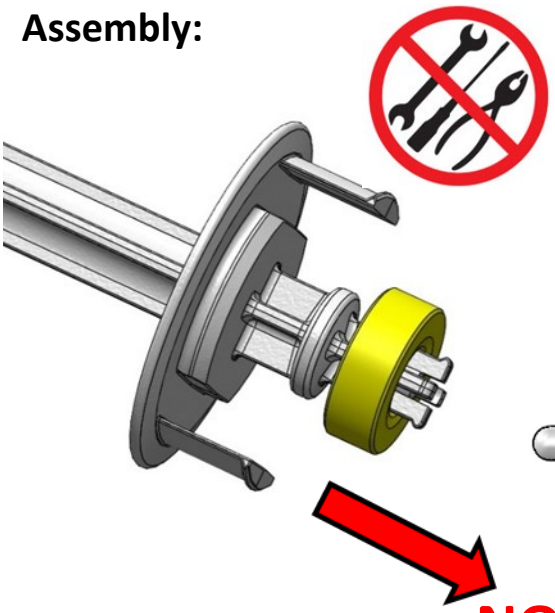

Piston ring is now PERMANENTLY ATTACHED! Do not remove. Make sure spring is attached but use no tools to install or remove spring. Do NOT use this rod for KETCHUP Dispenser.

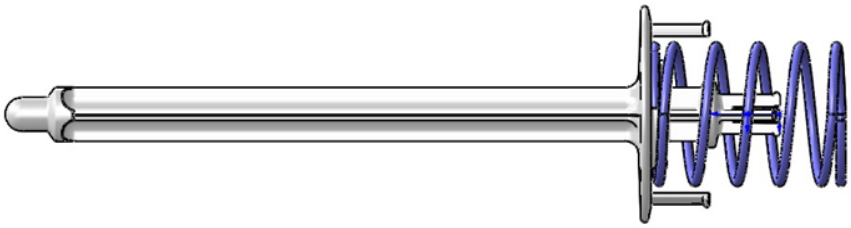

NO!

Make sure spring is snapped onto piston rod

Priming:

Fill with ketchup or mustard without lever installed.

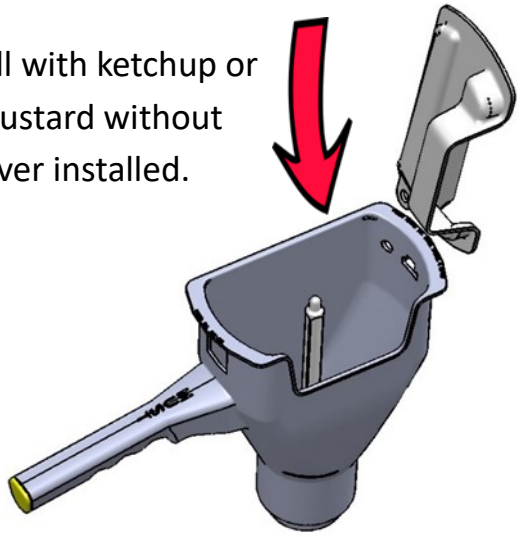

With a clean and empty dispenser add mustard BEFORE installing lever. If dispenser has run out of sauce during use it can be refilled without removing lever.





Washing:

HAND WASH PARTS ONLY! DO NOT PUT PARTS IN DISHWASHER OR POWER SOAK.

Read Operation Manual for full details on use and care of dispensers.

Printed in USA 08/18 ©2018

355 East Kehoe Blvd. • Carol Stream, IL 60188 USA
Telephone: 630-462-8800 • Toll Free: 1-800-PCASTLE

Operation Manual

Mustard Dispenser
Model No. 398-CN

Product Identification

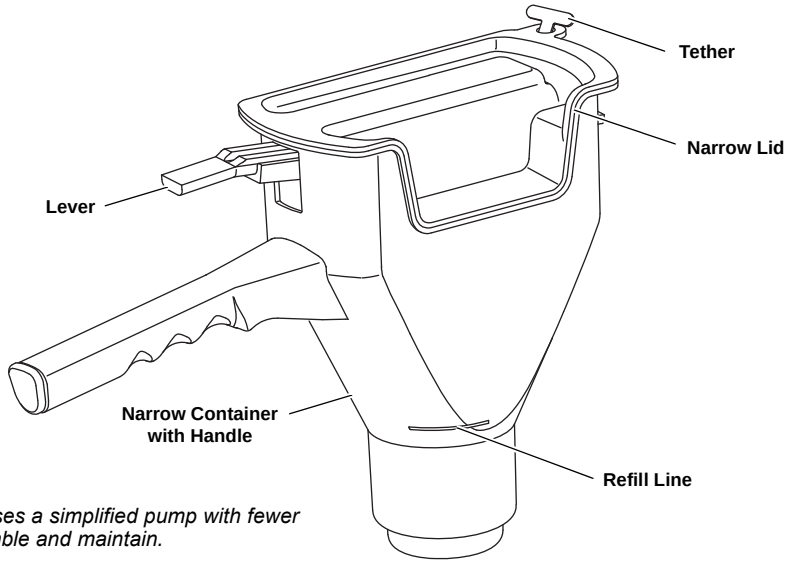

Note: This dispenser now uses a simplified pump with fewer parts that is easier to assemble and maintain.

LIMITED WARRANTY

This product is warranted to be free from defects in material and/or workmanship for a period of two (2) years from date of original installation, not to exceed 30 months from date of original shipment from our factory. If this product proves to be faulty in material and/or workmanship, it will be replaced or repaired (at the option of Prince Castle, Inc.) without cost to the customer for parts.

TABLE OF CONTENTS

Product Identification 1
Safety Information 2
Important 2
Setup 2
Calibration 3
Operation 3
Cleaning 4
Troubleshooting 4
Ordering/Service Information 4
Exploded View and Parts List 5
Parts Kits 6

PRINCE CASTLE INC.
WORLDWIDE
A Marmon Group / Berkshire Hathaway Company
355 East Kehoe Blvd. • Carol Stream, IL 60188 USA
Telephone: 630-462-8800 • Toll Free: 1-800-PCASTLE
Fax: 630-462-1460 • www.princecastle.com

Printed in USA 08/18 © 2018

Safety Information

CAUTION

Indicates information important to the operation of the unit. Failure to observe may result in damage to the equipment.

Hazard Communication Standard (HCS) – Procedure(s) in this equipment manual include the use of chemical products. These chemical products will be highlighted with bold face letters followed by the abbreviation (HCS) in the text of the manual. See the Hazard Communication Standard (HCS) Manual for the appropriate Material Safety Data Sheet(s) (MSDS).

Important

Prince Castle reserves the right to change specifications and product design without notice. Such revisions do not entitle the buyer to corresponding changes, improvements, additions or replacements for previously purchased equipment.

Setup

1 Place dispenser container in prep table pan (without internal parts).
Note: Before filling dispenser, shake mustard container vigorously. Be sure lid on mustard gallon is tightly sealed.

2 Assemble all internal parts of the pump assembly.

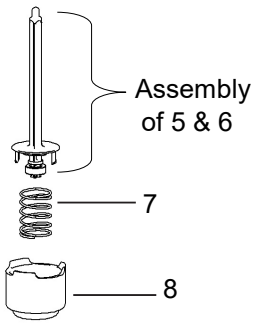

3 Place assembled pump into dispenser housing

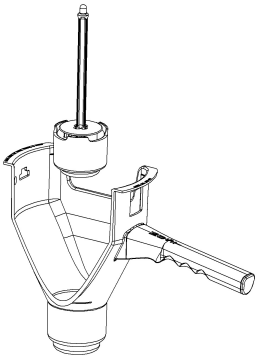

4 Before installing lever, pour mustard into dispenser. Do not overfill as mustard hardens over time and causes waste

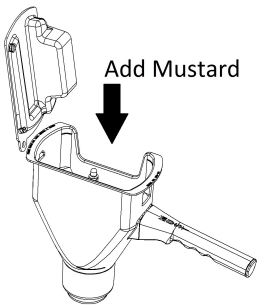

NOTE

Piston ring is permanently attached and CAN'T BE REMOVED. Spring snaps onto piston rod.

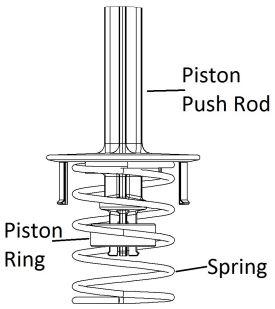

Setup (continued)

5 Attach lever so rounded corners face down towards the adjusting cam.

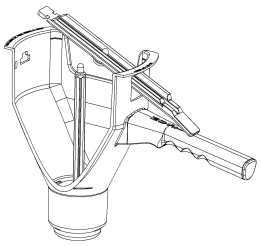

A. Slide lever through the hole in the container located above the handle of the dispenser.

B. Continue to slide the lever forward while pressing down on the piston push rod.

C. Continue to slide the lever forward until the push rod falls into the hole located in the lever.

D. Continue pressing adjusting cam and push rod while sliding the lever forward until the front end enters the “T”-shaped hole on the other side of the container.

6 Dispenser is now fully assembled.

Place the lid on top of the container before using the dispenser.

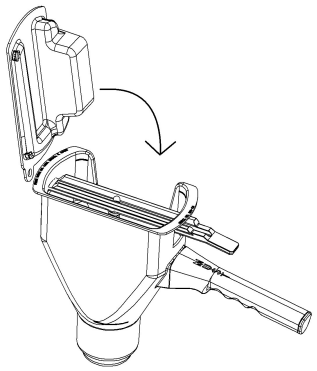

7 The mustard dispenser must be primed before using. Press down on lever several times to completely prime. If dispenser dispenses five equal drops, it is primed.

8 If Necessary, wipe the bottom of the dispenser with a clean, moist hand towel after priming.

Operation

This dispenser is used for portion control of mustard being dispensed on toasted buns.



- After buns are separated and placed on the prep table, hold dispenser approximately 1" (25 mm) above toasted bun.
- Press lever all the way down to dispense mustard on the caramelized surface of the toasted bun. This is repeated on all buns which require mustard.

Note: The mustard dispenser has a YELLOW cap on the end of the handle for easy identification.

To check operation, set brix cup under dispenser and dispense 47 shots of mustard into cup. The amount should be equal to 1fl oz (30ml) in the cup

Note: Allow the lever to return fully after each shot

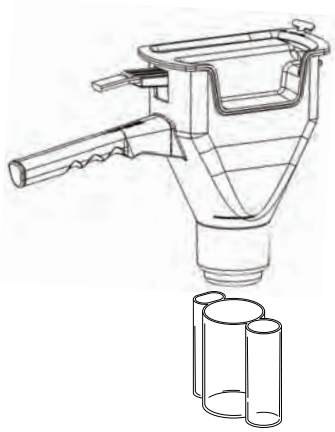

Cleaning

1. Empty mustard from dispenser and discard.
2. Fill dispenser with warm water. Repeatedly press actuating lever to pump water and flush out dispenser.
3. Remove internal parts from container by pushing down on the lever and the piston push rod. Slide the lever out of the "T" shaped hole in the container. Remove the adjusting cam.



4. Lift the push rod and the spring assembly straight up and out of the container.
5. Remove spring from piston rod and cylinder from the container. DO NOT REMOVE PISTON RING. If necessary, use small brush to clean area around piston ring. Wash the container and all loose internal parts in a solution of warm water and **All Purpose (APC) (HCS).**
6. Rinse all loose parts and the container with running water.
7. Sanitize dispenser. Use 1 packet of **Sanitizer (HCS)** to 2-1/2 gallons (8.5 l) of warm water.
8. Let air dry.
   Note: Do not reassemble dispenser until it is ready to be used the next day.

Troubleshooting

PROBLEM	PROBABLE CAUSE	SOLUTION
Will not dispense or does not dispense full portion.	Plastic parts broken.	Replace broken parts.
	Not assembled properly.	Assemble properly.
	Not primed.	See Setup procedure.
	Parts missing.	Check for proper assembly and placement.
Mustard pattern is irregular.	Diffuser holes plugged in bottom of container.	Disassemble and clean diffuser holes by flushing water through holes.
Mustard collects on bottom of dispenser.	Bottom of dispenser has made contact with bun.	Wipe off bottom of dispenser with damp cloth.
Mustard Dispenses Accidently	Lever accidentally pressed when placing dispenser in holder.	Never touch lever except to dispense mustard.

Ordering/Service Information

1. WHERE AND HOW TO ORDER REPLACEMENT PARTS
   To order replacement parts, look on the back of your Prince Castle Price List for the name and phone number of your local Prince Castle Service Center. You may also call Prince Castle at 1-800-323-2930 (or fax us at 630-462-1460) for the name of your local service center.
2. PARTS RETURNS
   To return parts to your service center for credit, you must obtain authorization from your center.
   Note: All warranty situations should be handled by your center.
3. PRICES
   A. All prices are F.O.B. Prince Castle Service Center or F.O.B. factory, Carol Stream, Illinois.
   B. All prices are subject to change without notice. These prices are exclusive of all sales taxes or any special taxes which may be levied by federal, state, or city governments.

OUTSIDE THE U.S.

Contact your kitchen equipment supplier or designated repair facility for parts and service.

NON-SCHEDULED MAINTENANCE

Not applicable.

Exploded View and Parts List

Item	Part No.	Description	Qty	Function
1	398-112	Narrow Container	1	Holds all internal parts in proper position and provides a reservoir for mustard
2	404-070	Lever	1	Pushes plunger rod down and forces piston to push mustard through diffuser holes located on bottom of container.
3	406-152	Narrow Lid	1	Keeps foreign particles out of container and keeps mustard from dying out
4	404-13	Tether	1	Attaches the lid to the container
5	404-072	Piston Push Rod	1	Pushes the piston down when the lever is pressed
6	404-071	Piston Ring	1	Works in Conjunction with Piston, comes attached to push rod
7	407-007	Piston Spring	1	Returns the piston rod and lever to the UP position
8	404-066	Cylinder	1	Holds mustard

Note: Parts are not sold individually. See parts kits on page 6.

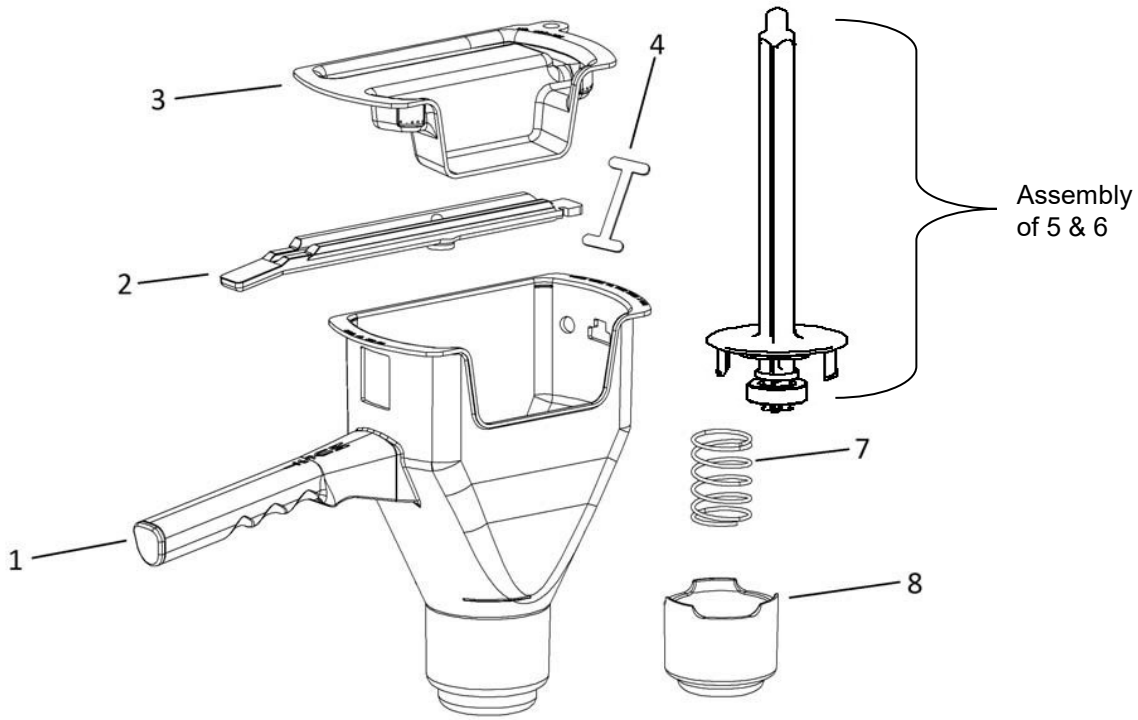

Parts Kits

406-152S - MCD, K&M KIT, LID & TETHER		
Part No.	**Description**	**Qty**
406-152	Narrow Lid	3
404-013	Tether	3

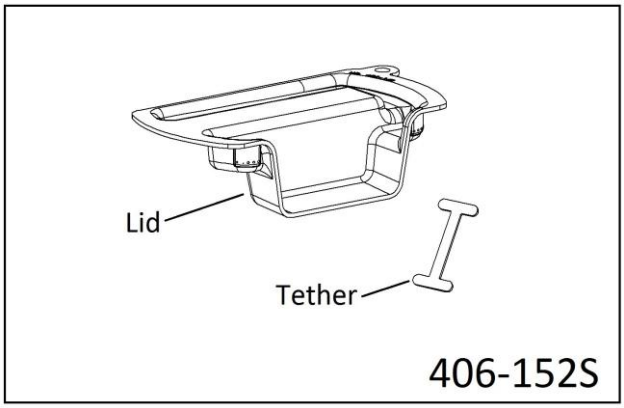

398-007S MCD DISPENSER SPRING KIT		
Part No.	**Description**	**Qty**
407-007	Piston Spring	2

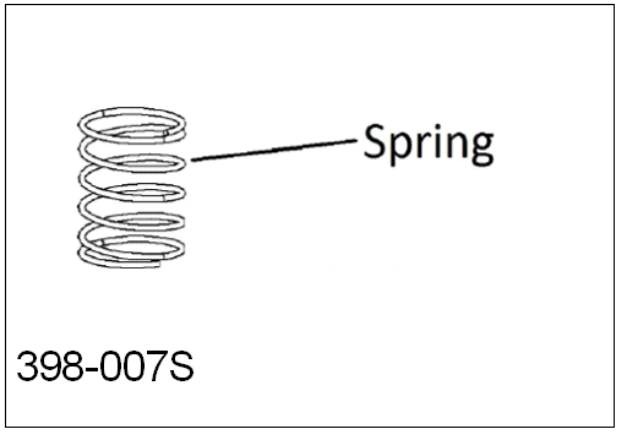

404-070S MUSTARD LEVER KIT		
Part No.	**Description**	**Qty**
404-070	Mustard Lever	2

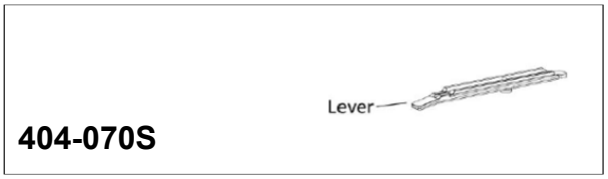

398B-INTS MCD MUSTARD DISPENSER INTERNALS		
Part No.	**Description**	**Qty**
404-070	Piston Spring	1
404-072	Piston Rod	1
404-071	Mustard Piston Ring	1
407-007	Piston Spring	1
404-066	Cylinder	1
404-072	Piston Rod	1
404-070S	Mustard Lever	1

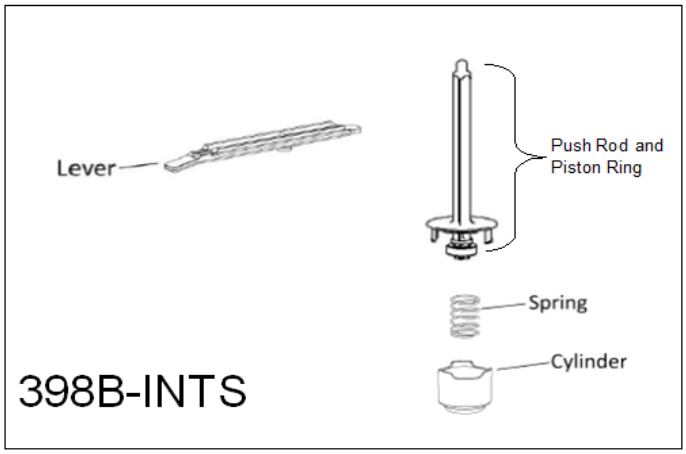

398-072S MCD PSITON ROD KIT		
Part No.	**Description**	**Qty**
404-072	Piston Rod	2
404-071	Piston Ring	2

