OPERATION MANUAL
FOR

Robot Coupe®

MODEL

R302V

robot coupe U.S.A., Inc.
P.O. Box 16625, Jackson, MS 39236-6625
280 South Perkins St., Ridgeland, MS 39157
email: robocoup@misnet.com
website: www.robotcoupeusa.com
1-800-824-1646

robot coupe® U.S.A., Inc.

Phone: 1-800-824-1646
Fax: 601-898-9134
email: robocoup@misnet.com

These plates are for the following machines: R100, R2N, R2N Ultra, R300, R301 Ultra, R302, R302V, and the CL30.

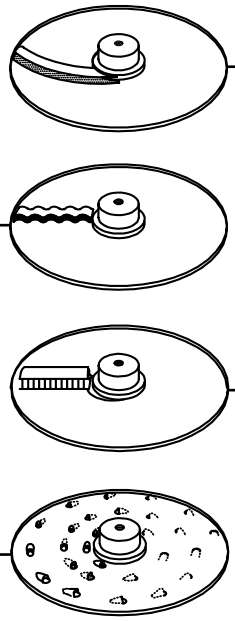

Slicing Plates	Size
R291	1MM 1/32
R210	2MM 5/64
R292	3MM 1/8
R211	4MM 5/32
R293	5MM 3/16
R270	6MM 1/4

Waved Slicing Plates	Size
R212	2MM 5/64

Julienne Plates	Size
R214	2x2MM 5/64x5/64
R296	2x4MM 5/64x5/32
R288	4x4MM 5/32x5/32
R297	2x6MM 5/64x1/4
R213	6x6MM 1/4x1/4
R298	8x8MM 5/16x5/16

Grating Plates	Size
R271	Hard Cheese
R294	Ex Fine .7MM .02
R295	Ex Fine 1MM 1/32
R208	1.5MM 1/16
R209	2MM 5/64
R281	3MM 1/8
R280	6MM 1/4
R215	9MM 3/8

The plates shown below are only used on the R302V, and the CL30 machines.

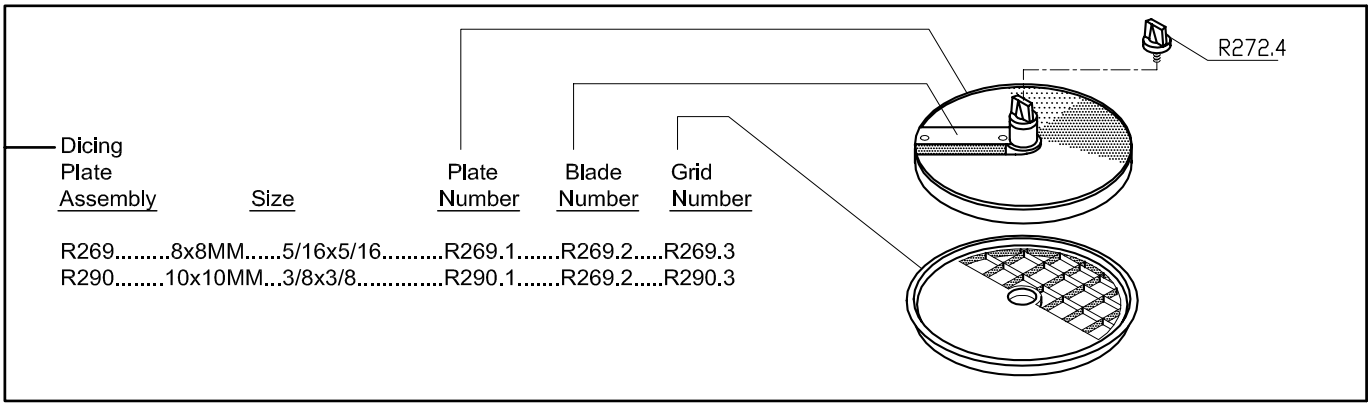

Dicing Plate Assembly	Size	Plate Number	Blade Number	Grid Number
R269	8x8MM 5/16x5/16	R269.1	R269.2	R269.3
R290	10x10MM 3/8x3/8	R290.1	R269.2	R290.3

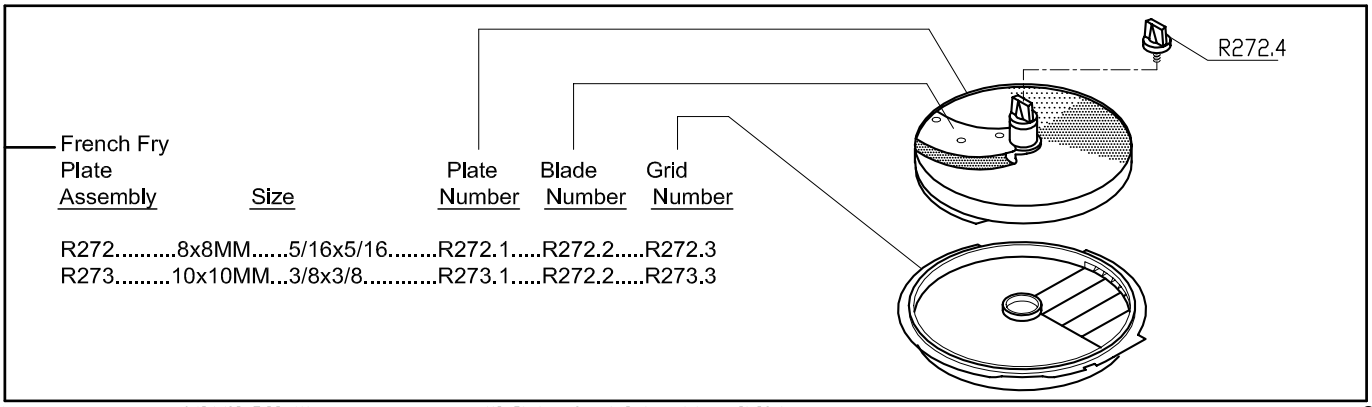

French Fry Plate Assembly	Size	Plate Number	Blade Number	Grid Number
R272	8x8MM 5/16x5/16	R272.1	R272.2	R272.3
R273	10x10MM 3/8x3/8	R273.1	R272.2	R273.3



I. INTRODUCTION

II. ASSEMBLY/DISASSEMBLY INSTRUCTIONS

III. OPERATING INSTRUCTIONS

IV. PREVENTIVE MAINTENANCE GUIDE

V. TROUBLE SHOOTING AIDS

VI. SERVICE AGENCY LISTING

INTRODUCTION

The Robot Coupe commercial food processor performs a host of culinary feats. It is designed for high speed and quality vegetable processing. The Robot Coupe *slices, juliennes, and shreds* with the continuous feed attachment, plus it will *chop, grind, puree, mix, or knead* using the cutter bowl attachment.

This operators manual is broken down into sections giving you detailed instructions for assembly and operation of the continuous feed attachment and the cutter bowl attachment. Close attention should be paid to all instructions in this manual to ensure a long life utilization of your food processor.

This manual should be kept within easy access to all users for reference, and should be read completely by all first time users of the machine.

Maintaining the food processor in good working condition is one of the most important measures to be taken. Inspect the machine and all parts regularly to make sure they are in good working condition.

DO NOT operate a machine that has mafunctioned in any way.

Discard any food processed at the time of a malfunction and have the machine inspected and repaired at one of the Robot Coupe Authorized Service Agencies, a list is provided in the back of this manual. Contact one of these service agencies for all of your service, parts and accessory requirements.

CAUTION: Your Robot Coupe comes with a sharp cutting "S" blade and cutting plates. Always handle with safety in mind. We suggest that a pair of cut-resistant gloves be worn when handling the "S" blade and plates.

Machine Specifications:
The Model **R3O2V** is equipped with a high speed motor generating 1/2 Hp which plugs into a standard 120 volt/ 60 Hz, 15 amp power outlet. The full load amperage rating is 12 amps. The machine is supplied with a 3 liter stainless steel bowl, with S-blade and clear plastic cover, a continuous feed attachment, and two cutting plates. The machine is equipped with push type on/off buttons and variable speed control.

II. ASSEMBLY/DISASSEMBLY INSTRUCTIONS

Your Robot Coupe should be placed on a sturdy work surface at a comfortable working height and have a standard 115 volt power outlet available. Always keep the machine unplugged during assembly and disassembly.

A. CUTTER BOWL ATTACHMENT ASSEMBLY INSTRUCTIONS

1. THE CORD SHOULD ALWAYS BE UNPLUGGED DURING ASSEMBLY AND DISASSEMBLY!

2. Place the motor base on a sturdy table. Then, as you are facing the front of the motor base, place the bowl on the motor base with the extension facing the front. Turn the extension just off center and to the left, then turn back counterclockwise locking it into place.
When the bowl is in the proper position, it should be level with the top surface of the motor base.

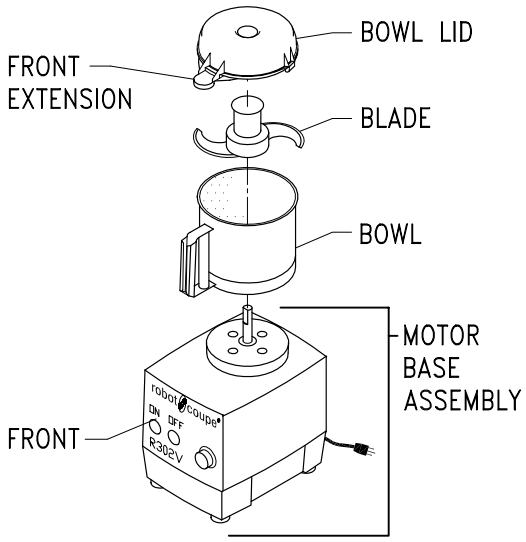

3. Place the cutter blade down on the motor shaft and rotate until it falls into place. The bottom blade should be parallel with and just off the bottom of the bowl.

4. Place the lid on the bowl with the lid extension (front) just off center and to the left. Rotate the lid counterclockwise until it stops.
The lid extension and bowl handle should be lined up and facing the front of the motor base.

DO NOT OPERATE THE MACHINE UNLESS IT IS PROPERLY ASSEMBLED AND THE LID IS FULLY SEATED AND CENTERED OVER THE BOWL!

B. CONTINUOUS FEED ATTACHMENT ASSEMBLY INSTRUCTIONS

1. THE CORD SHOULD ALWAYS BE UNPLUGGED DURING ASSEMBLY AND DISASSEMBLY!

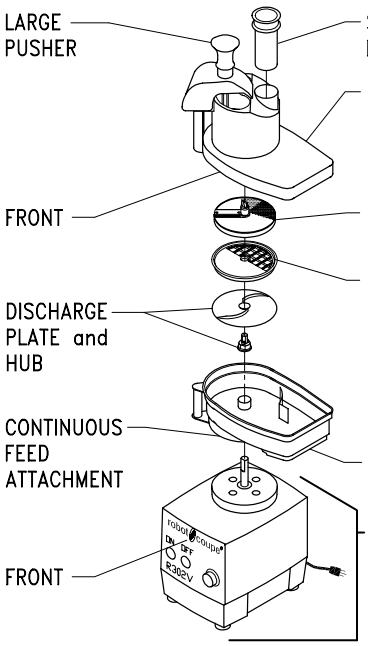

2. Place the motor base assembly on a sturdy table. Then, place the continuous feed attachment on the motor base with the discharge chute to the right (as you are facing the front of the motor base). Turn the attachment just of center and to the left, then turn back counterclockwise until it locks into place. The attachment should be level with the top surface of the motor base.

3. Place the plastic discharge plate on the motor shaft and twist until it drops into place. When properly installed, it should be level with and just off the attachment.

4. PREPARING TO SLICE OR GRATE: Place the cutting plate of your choice on the discharge plate and insure that it is fully seated.

5. Place the continuous feed lead on the continuous feed attachment with the front just off center and to the left, then twist back counterclockwise until it stops.

6. PREPARING TO DICE OR USE THE FRENCH FRY COMBINATIONS: SEE DIRECTIONS BELOW.

DO NOT OPERATE THE MACHINE UNLESS IT IS PROPERLY ASSEMBLED AND THE CONTINUOUS FEED LEAD IS FULLY SEATED AND CENTERED OVER THE ATTACHMENT!

If you are preparing to use the dicing or the French fry combinations

Dicing; follow **steps 1, 2, and 3** above, then, align the blades on the dicing grid with the entry port to be used (see drawing below). The large indentions on the outer rim of the grid should fit around the raised tabs on the continuous feed attachment. Place the corresponding slicing plate on the discharge plate and rotate until it falls into place. Secure the slicing plate by screwing it into the motor shaft using the provided knob. Continue with step #5 above.

French Fry combinations; First follow **steps 1, 2, and 3** above. Then, fit the molded plastic piece of the combo into the continuous feed attachment with the blades facing the discharge chute. The large indentions on the outer rim should fit around the raised tabs on the continuous feed attachment. Place the corresponding slicing plate on the discharge plate and rotate until it falls into place. Secure the slicing plate by screwing it into the motor shaft using the provided knob. Continue with step #5 above.

Turn the dicing grid in this direction when using the large opening.

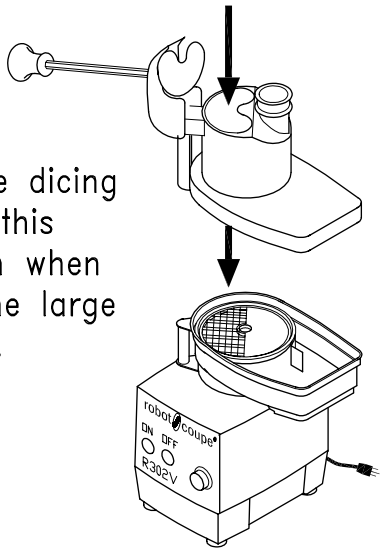

Turn the dicing grid in this direction when using the small opening.

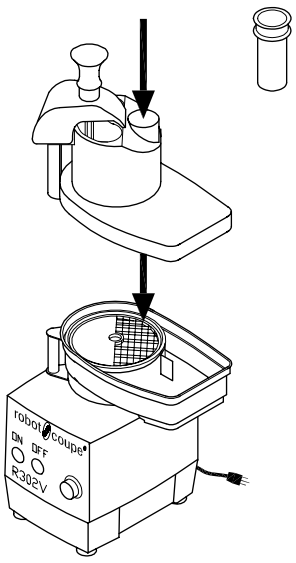

The continuous feed lead serves several functions. Primarily, the lead protects the operator from the cutting plate. When the lead is fully locked in place, the plate is covered and the unit will be ready for operation.

The continuous feed lead has two feed openings, one large and one small, with matching pushers. The food is inserted in the chosen opening by removing the pusher with one hand and then depositing the food into the chute with the other hand. The pusher should then be used to "push" the food through the opening.

CAUTION: Keep hands out of the feed openings.

The Food Processor is now assembled and ready to perform its desired function. Before continuing the operation-You should completely read the instructions contained in the rest of this manual.

DISASSEMBLY INSTRUCTIONS: Simply reverse the steps outlined in the assembly instructions with the power cord unplugged from its wall socket.

III. OPERATING INSTRUCTIONS

NOTE: This machine is equipped with manual reset thermal overload protection. If the machine is overloaded or run too long under heavy load conditions, the overload will trip. If this occurs, first remove the bowl and reduce the amount of food being processed. The reset button is located on the bottom right corner of the motor base. Press the button in to reset the overload protector.

A. INSTRUCTIONS FOR USE OF THE CUTTER BOWL

The cutter bowl attachment is used for grinding, pureeing, blending, mixing, of ingredients. With the power switch off and the bowl and blade secured in place (per previous instructions) you are now ready to add product to the bowl. There are two ways to run your machine. Chopping using a quick start/stop action or running continuously for a fine chop or puree. Most operations start by using the medium high speed (1725 RPM). Use this speed for chopping and general mixing requirements. Medium high is also used to initially reduce meats and vegetables prior to turning the machine to high speed. Some dough applications, like pie crust work best around 1100 RPM.

1. TO CHOP

To achieve a chopped consistency for vegetables, meats, cheese, etc., fill the bowl 2/3 to 3/4 full with portions no larger than 1 to 2 inch square. Start the machine allowing the machine to come up to speed then quickly press the stop switch. Continue this process until the desired consistency is reached. If the motor stalls, reduce the amount of product in the bowl.

2. TO PUREE OR FINE CHOP: For a fine puree , emulsification or fine chop fill the bowl 2/3 to 3/4 full with chunks no larger than 1 to 2 inches square. With the speed set at medium high, turn the machine on and allow to run a short time until the product is finely chopped, then increase to high speed to finish. High speed is only used to finish a product after it has been reduced at a lower speed. Some purees may require the addition of a liquid to obtain the correct consistency.

3. TO CHOP HARD CHEESE: Place uniform 1" to 1 1/2" cubes of chilled cheese up to 1 1/2 pounds into the bowl and pulse the machine. For powdered cheese pulse the motor until the cheese is about pea size then allow the motor to run continuously until you have a fine powder.

4. TO CHOP ONIONS, CELERY, CABBAGE, ETC. Quarter onions, and cut other vegetables into 2 to 3 inch portions. Place the product into the bowl up to 3/4 full and pulse the unit until you reach the desired consistency. **CAUTION:** If you overfill or allow the machine to run continually, the product on the top may not be cut while that on the bottom will be pureed.

5. TO PUREE OR MIX: To puree, make sauces, or to mix and blend, place the ingredients into the bowl (do not overfill), turn the unit on, and allow to run continuously.

DO NOT allow the machine to run unattended.

Sharpening the "S" blade

The "S" blade will require sharpening on a periodic basis depending on use. The use of a dull blade will sometimes give unsatisfactory results. A honing stone is provided with each machine for this purpose. Follow the directions shown to sharpen the blade, or have the blades sharpend professionaly if you prefer.

1. Put on your cut-resistant gloves
2. Use the Robot Coupe stone or any good sharpening stone.
3. Hold or clamp the blade flat on the edge or corner of a sturdy table.
4. With the other hand hold the stone at a 30 degree angle against the top bevel of one blade.
5. Pull the stone into the blade edge moving from hub to tip, several strokes, until the blade is sharp.
6. Turn the blade over and rub the stone flat against the underside of the blade to remove the feather edge formed at step 5.
7. Repeat the procedure for the other blade.
8. Wash the blade before use.

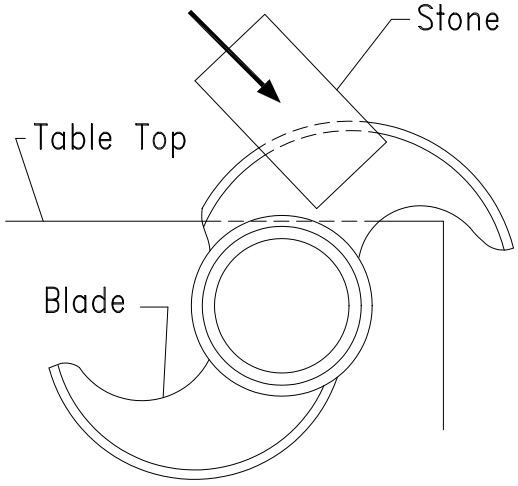

B: INSTRUCTIONS FOR USE OF THE CONTINOUS FEED ATTACHMENT:

This attachment is always used with speeds less than 1725 RPM (medium high). Running the machine with this attachment at speeds higher than medium high (1725 RPM) should not be done under any circumstances.

The continuous feed attachment should only be run at speeds approaching the medium high setting during a shredding operation such as shredding carrots or cabbage. Running cheese at the medium high speed will result in poor quality. The dicing operation should never be run on speeds higher than medium. As a general rule, you should limit the use of the continuous feed attachment to the low and medium speeds.

Running the machine with this attachment at speeds higher than medium high speed can cause damage to the machine. Damage caused by running the machine at the higher speeds is not covered under warranty.

As indicated on the front data plate, use the low speed (370 RPM) for soft products such as tomatoes, kiwi, strawberries, bananas, etc. The softer products cut better at the lower speeds. Additionally, most dicing and some julienne operations perform best at the lower speeds. The medium speed (850 RPM) is used for all other products. Slicing, shredding, and julienne should be performed using the medium speed. Trial runs with your particular product at different speeds should be noted for future use.

The Robot Coupe Food Processor will slice, grate, shred and julliene. These processes will be performed in a matter of seconds. Because of the speed of the process, it is necessary that the operator perform preliminary steps before turning the machine on. Food preparation, feed chute loading, and availability of a receptacle for receiving the finished product are some of the steps to assure positive control of the processing operation.

Food preparation will be required to assure that the produce will fit a feed chute with the pusher covering the product. Additionally, according to personal preference, some products may or may not be cored or peeled. Feed chute selection should be made depending upon the product to be processed. As an example, good consistency of small round produce (carrots, cucumbers, etc.) necessitates use of the small feed chute to allow better operator control. Use of the larger port for this type of produce may result in an undesired finished product, e.g., slicing with the grain. In general, more control of the processing operation can also be obtained by filling the selected feed chute and placing the pusher in position before turning the machine on.

Adherence to certain operational techniques will also enhance the processing operation. For instance, a consistent pressure with the pusher upon the produce will yield a consistent output. Application of more pressure will increase the thickness of the product, e.g., thicker slice, while reduction in pressure will result in a finer product. However, do not apply enough pressure to stall or slow the motor. This will cause damage to both the plate and the motor. If no pressure is applied at all and the produce is permitted to bounce around, an inconsistent product may result. When the pusher has settled fully in the feed chute, press the off switch and re-load the entry port for a repeat process.

THE UNIT SHOULD BE OFF EXCEPT WHEN PROCESSING IS UNDERWAY. It is recommended that the machine be operated on a 50% duty cycle. This is easily accomplished since the preparation time (cleaning, coring, peeling, and loading) takes longer than the processing time. This will yield the longest life for your machine.

DO NOT remove the continuous feed lead when the motor is running. Wait until the motor has come to a full stop.

DO NOT attempt to run frozen products through the cutting plates.

DO NOT put anything other than food products in the feed chute.

Wear cut-resistant gloves when handling the cutting plates.

(1) Slicing Operation: When preparing food to be sliced, make sure the food will fit into the proper feed chute. Produce such as carrots, cucumbers, etc., should be "squared" at both ends. This will provide a consistent slice throughout the whole product. With cabbage, lettuce or any product that has an undesirable core, the core should be removed. Medium size heads of lettuce or cabbage may be cut into thirds to fit in the feed chute. It is also suggested that the rounded half be squared to permit a consistent cut. The rounded portion can be dropped into the chute at the end and with no pressure applied, it will normally be processed uniformly. Larger heads of cabbage or lettuce may be more effectively processed if they are cut into fourths. When the preparation has been accomplished, fill the selected feed chute, place the pusher in position, turn the machine on and observe the results.

(2) Grating Operation: Again, prepare the product as to allow insertion into the feed chute. Consider which chute will be used. As an example, placement of carrots horizontally in the large chute will result in a long grated product, while vertical insertion in the smaller chute will result in a short grated product. It is recommended that chilled cheese be used when grated cheese is desired, otherwise a gumminess may result. A fine coating of cornstarch applied to the cheese before grating will aid in keeping the finished product separated. A fine coating of cornstarch will not be visible and is tasteless. Grating cheese is one of the most trying processes and because the nature of the product may cause overheating of the motor if not grated in the recommended manner. It is recommended that a slight pulsating pressure be applied with the pusher while grating, alternating slight pressure on the pusher—no pressure—continuing in this manner until the block of cheese is completely grated. It is recommended that the cheese be prepared to fit the opening in volumes which will permit motor cool-down time during long production runs.

(3) Julienne Operation: Insertion of the product to be cut must be horizontal if a long stick is to be achieved, e.g., squash sticks. Vertical insertion will result in finely chopped products, e.g., chopped celery. A finely chopped onion product may also be obtained with this operation.

Plate Utilization

The Robot Coupe food processor will perform a variety of functions: slicing, grating, French fry, and julienne. There are a total of 25 different plates available to perform these functions to meet individual tastes.
The 25 plates consists of:

7 slicing plates
8 grating plates
6 julienne plates
2 French fry combinations
2 dicing combinations

The standard Robot Coupe comes with two (2) plates. Check your most current price list for the plates which are included as standard. The number and type of plates will vary depending upon the use of the machine.

SLICING PLATES

The seven (7) slicing plates range from 1mm (approximately 3/64") to 6.5mm (approximately 1/4"):

Part Number	MM Slicing	Inches (Approx.)
R291	1mm	1/32 in.
R212	2mm Waved	5/64 in.
R210	2mm	5/64 in.
R292	3mm	1/8 in.
R211	4mm	5/32 in.
R293	5mm	3/16 in.
R270	6.5mm	1/4 in.

Plate Usage

SLICING PLATES

R291 1/32" or 1mm Slicing Plate
The thinnest slicing plate is the R291. It is used for paper thin slicing of potatoes for potato chips. This plate will also slice carrots lengthwise which can be soaked in cold water to make flower petals for garnish.

R210 5/64" or 2mm Slicing Plate
The next to the thinnest of the straight slicing plates is the R210. It provides a wafer thin slice that makes harder vegetables look best. Carrots, radishes, celery and potatoes look terrific through this plate. This is the best plate for shredded lettuce for tacos and sandwiches. This is also the plate for cabbage for a German style slaw.

R292 1/8" or 3mm Slicing Plate
This is one of the new thickness of slice available. By cutting 1/8" thick it gives good shelf life and maximum yield. Almost any vegetable can be cut with this plate and gives greater yield than the standard slicer which comes with the unit.

R211 5/32" or 4mm Slicing Plate
The R211 is the best all purpose slicing plate. For most vegetables this thickness is best. Cucumbers, mushrooms, zucchini, and celery all cut beautifully with the R211 while providing a good shelf life. This is the second most popular plate requested and comes standard with the unit. Even soft foods like strawberries, bananas, and green onion tops slice marvelously.

R293 3/16" or 5mm Slicing Plate
Some foods are more attractive when sliced a bit thicker and that is the function of the R293. Half slices of tomato or bell pepper work good as well as yellow squash and zucchini. Try deep fried thick slices of potato using the R293 for home fries.

R270 1/4" or 6mm Slicing Plate
For soups and stews an extra thick slice is desirable. Carrots and celery work great this way. Any food that you want a more generous slice on will look terrific through the R270. For this reason it is the third most popular plate .

R212 5/64" or 2mm Waved Slicing Plate
This is a decorative, thin, waved slice. Harder vegetables will work best with this plate like carrots, radishes, zucchini and potatoes.

GRATING PLATES

There are eight grating plates available for use with the Robot Coupe:

Part Number	Metric	Inches (Approx.)
R271 Hard Cheese Grating		
R294 Extra Fine	.7mm	.02 in
R295 Extra Fine	1mm	1/32 in.
R208 Fine	1.5mm	1/16 in.
R209 Medium	2mm	5/64 in.
R281 Medium Coarse	3mm	1/8 in
R280 Medium Coarse	6mm	1/4 in.
R215 Extra Coarse	9mm	3/8 in.

Plate Usage

GRATING PLATES

R271 Hard Cheese Grating Plate
The R271 is the plate which will make a powder from hard cheeses. Parmesan and Romano are used most extensively with this. When potatoes are run through this plate a batter is produced which is excellent for potato pancakes.

R294 .02” or .7mm Pulping Plate
The R294 pulping plate was created to grind Chinese radish into a pulp that is served with sushi. Moreover, it will render any vegetable into a wet pulp or batter, much the way a vegetable juicer does. This is ideal for vegetable sauces that are low fat.

R295 1/32 or 1mm Pulping Plate
The R295 reacts identically to the R294 but is just slightly coarser so that not as much juice is extracted. Use on ginger root (shoga), white radish (dikon), baby turnips (kabo), or lotus root (renkon).

R208 1/16" or 1.5mm Fine Grating Plate
The R208 is a delicate grate used mostly for cheeses and carrots. The width of the grate is 1/16" or 1.5mm It also does an excellent job on bread crumbs and cold chocolate.

R209 5/64" or 2mm Medium Grating Plate
This is the most ordered plate of this series. While being used mainly for cheeses and carrots its size, 5/64" or 2mm, gives maximum yield with excellent shelf life. Also used on coconuts and potatoes for hash browns. This is the grating plate that comes standard with the unit.

R281 1/8" or 3mm Medium Coarse Grating
This new size grating plate is good for an extra fine coleslaw or anything you prefer grated a bit coarser than the standard R209 medium grating plate. This plate works wonderfully with cheese, potatoes, beets, eggs, cabbage or sweet potatoes.

R280 1/4" or 6mm Coarse Grating Plate
This in between size of grate has become popular with salad bars. Cheeses and carrots appear a bit more generous when grated this way. Also purple cabbage run trough this plate can add a splash of color to a salad bowl filled with lettuce.

R215 3/8 or 9mm Extra Coarse Grating Plate
The R215 is the widest grating plate. It provides an extra thick grate of cabbage for slaw and cheeses for melting. Mozzarella cheese looks terrific through the R215

JULIENNE PLATES

There are six julienne plates available:

Part Number	Metric	Inches (Approx.)
R214	2x2mm	5/64 x 5/64 in.
R296	2x4mm	5/64 x 5/32 in.
R288	4x4mm	5/32 x 5/32 in.
R297	2x6mm	5/64 x 1/4 in.
R213	6x6mm	1/4 x 1/4 in.
R298	8x8mm	5/16 x 5/16 in.

Plate Usage

JULIENNE PLATES

Products such as squash sticks, chopped celery, and finely chopped onions are obtainable as well as julienne celery

DO NOT ATTEMPT TO JULIENNE MEATS OR CHEESES.

R214 5/64 x 5/64" or 2 x 2mm Julienne Plate
The R214 is an extremely fine julienne which can dress up a salad. Radishes potatoes and carrots work best. Try julienne radishes with the R214 for an ultra-fine cut that looks like a top chef worked for hours preparing.

R296 5/64 x 5/32" or 2mm x 4mm Julienne Plate
This is an interesting flat julienne that gives substance to a delicate cut. One unique function of this plate is to duplicate the slaw cut that comes from a buffalo chopper. Try the R296 with radish, potato, summersquash, or sweet potato.

R288 5/32 x 5/32" or 4mm x 4mm Julienne Plate
This is the most popular of the julienne plates. Carrots, yellow squash, and zucchini work best. These can be sautéed and makes a beautiful garnish for an entree. Try steaming these too for a healthy and colorful side dish.

R297 5/64 x 1/4" or 2mm x 6mm Julienne Plate
This new julienne cut is becoming a very popular presentation on salads. Carrots, zucchini and yellow squash look especially good this way.

R213 1/4 x 1/4" or 6x6mm

R298 5/16 x 5/16" or 8x8mm

DICING COMBINATIONS

There are two dicing combinations available:

Part Number	Metric	Inches (Approx.)
R269	8x8mm	5/16 x 5/16 in.
R290	10x10mm	3/8 x 3/8 in.

FRENCH FRY COMBINATIONS

There are two French fry combinations available:

Part Number	Metric	Inches (Approx.)
R272	8x8mm	5/16 x 5/16 in.
R273	10x10mm	3/8 x 3/8 in.

PLATE HOLDER

R255 Plate Rack
Holds nine plates

R213 1/4" or 6.5mm French Fry Plate
This might as well be called the taco plate. Tomatoes and onions can be quartered and allowed to gravity feed through the lead and are chopped without damage. Lettuce can be cut for a chopped taco lettuce. Chopped onions through the R213 are great for hot-dogs also. Every school system should have this plate. Bell peppers can be chopped like the onions for meatloaf or chili. As a sideline the French fry plate makes great French fries and is the fifth most popular plate.

R298 5/16" x 5/16" or 8mm x 8mm Julienne Plate
The 8 x 8mm julienne plate is great for zucchini, onions, and eggplants.

While the standard Robot Coupe comes with two specific plates (R209 and R211 at time of printing), many user applications may require some of the optional plates available with the unit. As an example, a typical salad bar might use:

R210 2mm (3/32 in.) Slicing plate
R211 4mm (5/32 in.) Slicing plate
R209 Medium Grating plate

The R210 plate could be used to slice cucumbers, carrots, celery, etc. Good yield with long shelf life.

The R211 plate could be used to provide half slices of tomatoes, bell peppers, or onions.

The R209 Medium Grating plate would process carrots, cheese, etc.

IV. CLEANING/PREVENTIVE MAINTENANCE

(1) CLEANING: Proper cleaning of the machine is one of the most important preventive maintenance measures the user can employ. The high acid content of food can cause harm to the electrical parts contained within the housing. Although a seal isolates these elements from the outside, food juices will tend to seep. If food juices are allowed to collect on the machine over periods of use , erosion of the seal can occur. It is recommended that the machine be cleaned after each operational use.

Correct cleaning procedures are required to assure that damage is not inflicted in the cleaning process. The motor base assembly contains the motor and electrical components.

DO NOT IMMERSE THE MOTOR BASE ASSEMBLY IN WATER!

CLEANING INSTRUCTIONS

ATTACHMENTS: Remove and disassemble all attachments before cleaning. The bowl and continuous feed attachments should be cleaned per the following instructions or as required by local health department regulations.

The bowl, blade, lid, continuous feed attachment, continuous feed lead, pushers and plates are dishwasher safe. All of the attachments listed above can be washed in a dish machine or three tank system pot sink. Pre-rinse the attachments before washing to remove any bulk food on the parts. A stiff bristle brush or power sprayer faucet attachment is effective in knocking the food out of the crevices as a pre-rinse procedure. The washer should have an industry standard wash, rinse and sanitization cycle. Allow the parts to air dry after sanitizing and before reassembly.

NOTE: The high temperatures of dish machines will tend to shorten the life of the plastic and rubber parts. Hand washing using a three pot sink will provide for the longest life of these parts.

Wear cut-resistant gloves when cleaning the blade and plates to prevent cuts.

Inspect the area on the outside of the bowl and feed attachment around the handle and magnetic rod to ensure they are clean. Use a brush on these areas if required.

MOTOR BASE: Cleaning of the motor base assembly must be done with care. First unplug the unit. A sponging with a cloth lightly soaked (not dripping) in a mild detergent is acceptable, making sure the water is not permitted to penetrate the shaft seal or around the switches. Clean around the shaft seal with a small brush, taking care to remove all food. Do not forget to clean the motor shaft. Rinse the motor base first using a cloth lightly dampened (not dripping) with water, then with a sanitizing solution, and dry the machine with a soft cloth removing all liquids from seal areas.

(2) PREVENTIVE MAINTENANCE CHECKS Your Robot Coupe has been designed to provide maximum trouble free performance. Adherence to the assembly and operating instructions will further assure good performance. Additionally if simple common sense rules are applied, a long life will be achieved.

An examination should be made periodically to assure that a seal against food is being maintained around the motor shaft. With proper care, and depending on use, the seal should last for a year or more. However, it can and should be replaced whenever wear or erosion is noted, or minimally once per year. It is recommended that the seal be replaced by an authorized repair agency.

Blades should be kept sharp. It is not necessary to have a razor edge however they will need sharpening periodically. Replacement of the dull blades or plates is recommended.

(3) CARE: While your Robot Coupe is a ruggedly constructed machine, overall handling should be accomplished with a sense of use rather than abuse. Reasonable care should be exercised. While the machine is reasonably portable, care should be taken not to drop it. Equally, caution should be exercised in handling all the parts to assure they are not damaged.

In general, the best preventive measures that can be applied are close adherence to the assembly, operation, cleaning, and handling instructions, common sense and regular maintenance.

(4) TROUBLE SHOOTING AIDS: The following sections indicate potential problems and the correct solution which should be implemented by the user. Problems which extend beyond these will require an experienced serviceman. A list of the authorized agencies is supplied.

V. TROUBLE SHOOTING AIDS

A. Unit does not start when assembled correctly
   1. Pull plug and try another outlet
   2. Make sure bowl lid or continuous feed lead is in the proper position with the pusher located over the pusher opening.

B. Bowl or continuous feed lead will not fit flush with continuous feed attachment
   1. Processing plate is not in it's proper position.
   2. Rim of plate should be level with upper edge of motor base.

C. Unit stops during processing
   1. Turn unit off, and unplug machine
   2. Remove continuous feed lead
   3. Remove cutting plate
   4. Remove product being processed from inside of machine and continuous feed lead
   5. Reassemble unit

D. If unit does not operate after following above
   1. Check outlet for current (Breaker or Fuse)
   2. Try unit again
   3. Call local authorized service agency.

E. Unit starts to spark or smoke
   1. Turn unit off, unplug it, call local authorized service agency.

F. Unit makes grinding noise
   1. Turn unit off, disassemble, check continuous feed lead and processing plate to see if they have been rubbing together (small pieces of plastic would be present).
   2. If this was the case the processing plate was not fully seated. Check for food particles inside stem of processing plate.
   3. Replace the plate insuring that it is fully seated. Make sure there are not food par ticles on the motor shaft.
   4. If noise continues, turn unit OFF and remove processing plate. Assemble unit without plate and turn unit ON. If no noise—processing plate may be bent or warped. Try another plate. If noise persists, call your local factory authorized service agency.

G. Cucumbers coming out with torn skins and/or with seeds knocked out
   1. Blade is dull on plate and must be changed.
      NOTE: Cucumber condition before process ing should be considered.

H. Carrots are watery after grating
   1. Grating grid surface is dull and should be re placed.

I. Cheese forms balls instead of shreds
   1. Warm cheese
   2. The grating grid is dull and should be replaced

J. Machine becomes jammed while processing
   1. Turn unit OFF, and unplug machine. Remove continuous feed lead and remove remnants of product being processed. **Put on a pair of cut-resistant gloves** and try and turn plate manually in a counterclockwise direction. CAUTION: This may be very hard to do. As soon as you feel the plate slip, you will be able to reassemble the unit and continue pro cessing. If unit jams again, repeat above until you get the plate to slip. Now, remove and clean the plate. Before reassembling make sure:
      a. Motor shaft is clean.
      b. Plate is fully seated on motor shaft.
   2. If jamming is too tight to loosen by hand, contact service agency.

CAUTION: It is advisable to keep the machine unplugged while cleaning or servicing.

VI. SERVICE INFORMATION / SERVICE AGENCY LIST

Your Robot Coupe has a one year limited warranty against defects in parts and workmanship. Should the unit require service, check with your distributor to see where local service is available. If not or if you wish your unit to be serviced at the factory, call for a return merchandise authorization (RMA) number, and upon receipt of same, ship it PREPAID and insured to our factory address.

USA, Inc. Service Dept.
Phone: 1-800-824-1646
601-898-8411