BRAVILOR BONAMAT

FRESHMORE

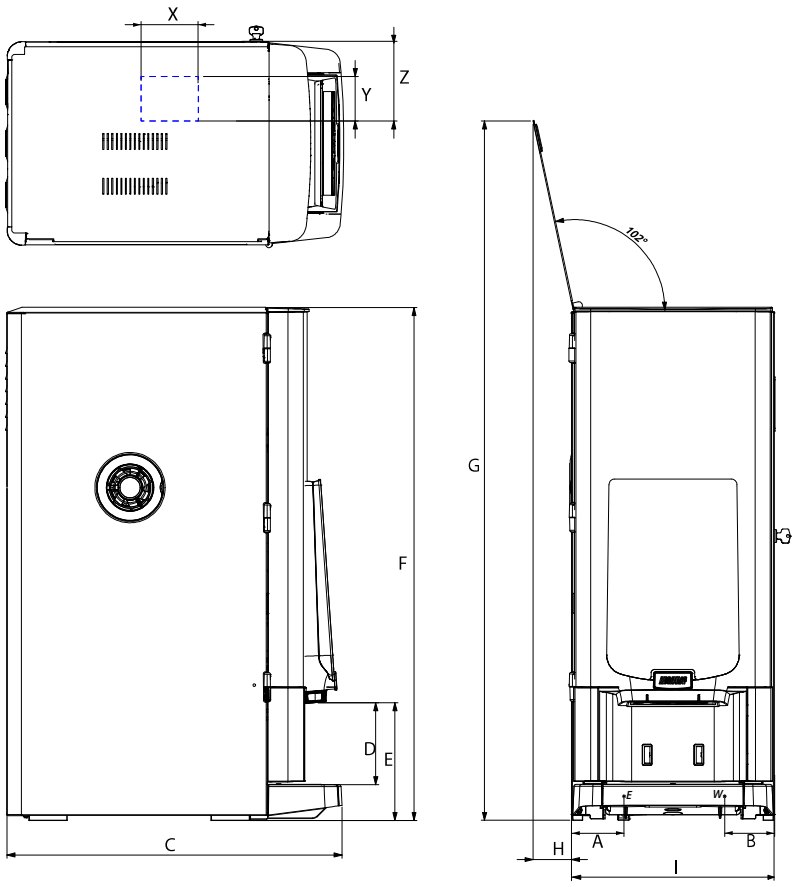

Ref.	mm
A.	81
B.	79
C.	524
D.	128
E.	184
F.	803
G.	1094
H.	60
I.	317
X.	89
Y.	70
Z.	124

Original document by manufacturer
© Copyright Bravilor Bonamat B.V.

BRAVILOR BONAMAT

FRESHGROUND

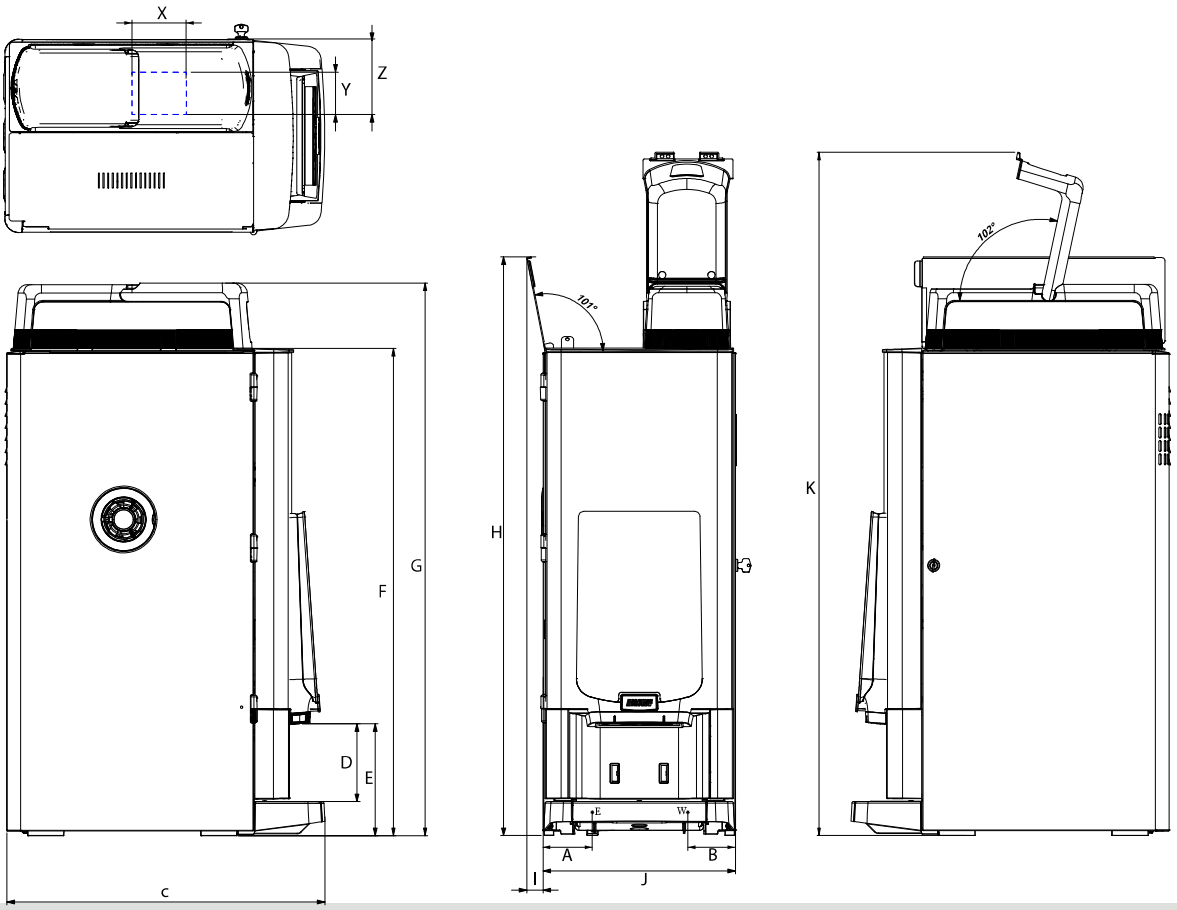

Ref.	mm
A.	81
B.	79
C.	524
D.	128
E.	184
F.	803
G.	910
H.	953
I.	27
J.	1125
K.	317
X.	89
Y.	70
Z.	124

Original document by manufacturer
© Copyright Bravilor Bonamat B.V.