INSTRUCTION MANUAL

NUVIA

APPLICARE

TARGA

CARATTERISTICHE

Code IC193-034356_00

We wish to thank you for the preference granted to us by purchasing one of ***Carpigiani*** *machines.*

To the best guarantee, since 1993 ***Carpigiani*** *has submitted its own Quality System to the certification according to the international Standard ISO 9001, nowadays its production has got UNI-EN-ISO 9001 Certified Quality System.*

Moreover, Carpigiani machines comply with the following European Directives:

- "Machinery" Directive 2006/42/EC,
- "Low Voltage" Directive 2014/35/EU,
- "EMC" Directive 2014/30/EU,
- "PED" Directive 2014/68/EU,
- Regulation 2004/1935/EC relating to "Materials and articles in contact with foodstuffs"
- Regulation 2023/2006/EC "Good manufacturing practice for materials and articles intended to come into contact with food"

CARPIGIANI

Via Emilia, 45 - 40011 Anzola dell'Emilia (Bologna) - Italy

Tel. +39 051 6505111

This manual contains a TRANSLATION OF THE ORIGINAL INSTRUCTIONS and may not be reproduced, transmitted, transcribed, filed in a data retrieval system or translated into other languages, without the prior written permission of **CARPIGIANI**.
The purchaser has the right to reprint it for his own office use.
CARPIGIANI policy pursues a steady research and development, thus it reserves the right to make changes and revisions whenever deemed necessary and without being bound to previous statements to the purchaser.

Rev.: 00	**Date:** 2025/11	**Modifications:**
Editor: AM	**Verified:** EF	**Approved:** AGG

TABLE OF CONTENTS

FOREWORD 5

INSTRUCTION MANUAL 5
PURPOSE 5
STRUCTURE OF THE MANUAL 5
ADDITIONAL DOCUMENTATION 5
CONVENTIONAL SYMBOLS 6
SYMBOLOGY QUALIFICATION OF THE STAFF 6
SAFETY 7
WARNINGS 7

1. GENERAL INFORMATION 9

1.1 GENERAL INFORMATION 9
1.1.1 Manufacturer's identification data 9
1.1.2 Information about service 9
1.1.3 Information to the user 9
1.2 INFORMATION ABOUT THE MACHINE 9
1.2.1 General data 9
1.2.2 Machine layout 10
1.2.3 Technical features 11
1.3 INTENDED USE 11
1.4 NOISE 11
1.5 STORING A MACHINE 11
1.6 DISPOSAL OF PACKING STUFFS 12
1.7 WEEE (Waste Electrical and Electronic Equipment) 12

2. INSTALLATION 13

2.1 ROOM NECESSARY TO THE MACHINE USE 13
2.1.1 Handling the machine 13
2.2 MACHINE WITH AIRCOOLED CONDENSER 14
2.3 ELECTRICAL CONNECTIONS 14
2.3.1 Equipotential connection 14
2.3.2 Replacing the power cable 14

3. DIRECTION FOR USE 15

3.1 MACHINE CONFIGURATION 15
3.2 ELECTRONIC CONTROL KEYBOARD AND BUTTON FUNCTIONS 15
3.2.1 Controls 15
3.3 PUMP AND AIR REGULATOR VALVE 17
3.4 TEXTURIZER, DISPENSING VALVE AND NOZZLE. 17
3.5 PRELIMINARY OPERATIONS, WASHING AND SANITIZATION 18
3.6 PRODUCTION AND DISTRIBUTION OF WHIPPED CREAM 18
3.6.1 Choosing the liquid cream 18
3.6.2 Machine Startup 19
3.7 STORAGE 19
3.8 PROGRAMMING FOR USER 20

4. SAFETY DEVICES 23

4.1 ALARMS 23
4.2 BLACK-OUT 25

5. CLEANOUT DISASSEMBLING AND REASSEMBLING OF PARTS IN CONTACT WITH THE PRODUCT 27

5.1 GENERAL DESCRIPTION 27
5.2 WASHING CONDITIONS 27
5.3 TIPS 27
5.4 HOW TO USE CLEANING/SANITISING SOLUTION 28
5.5 DAILY CLEANING 28
5.5.1 CIP counter 28
5.5.2 Cleaning in place - semiautomatic cycle 28
5.6 SCHEDULED CLEANOUT 31
5.6.1 Programmed maintenance cleaning - Maintenance Washing 31
5.6.2 Disassembling 31
5.6.3 Washing, sanitizing and refitting the components 35
5.7 SANITIZATION 37
5.8 HYGIENE 38

6. MAINTENANCE 39

6.1 SERVICING TYPOLOGY 39
6.2 AIRCOOLING 39
6.3 ORDERING SPARE PARTS 39

7. TROUBLESHOOT GUIDE 41

FOREWORD

INSTRUCTION MANUAL

The European Community directions on safety standards as well as on free circulation of industrial products within the E.C. were taken into due account when editing this manual.

PURPOSE

This handbook was conceived taking machine users' needs into due account.
Topics relevant to a correct use of the machine have been analyzed in order to keep unchanged in the long run quality features characterizing **CARPIGIANI** machines all over the world.
A significant part of this manual refers to the conditions necessary for the machine use and to the necessary procedures during cleaning as well as routine and special maintenance.
Nevertheless, this manual cannot cover any possible need in detail. In case of doubts or missing information, please contact:

CARPIGIANI	Via Emilia, 45 - 40011 Anzola dell'Emilia (Bologna) - Italy Tel. +39 051 6505111

STRUCTURE OF THE MANUAL

This manual is divided in sections, chapters and sub chapters for an easy reference.

Section
A section is the part of the manual identifying a specific topic related to a machine part.
Chapter
A chapter is that part of a section describing an assembly or concept relevant to a machine part.
Sub chapter
It is that part of a chapter detailing the specific component of a machine part.

It is necessary that each person involved in the machine operation reads and understands those parts of the manual of his/her own concern, and particularly:

- The Operator must read the chapters concerning machine start-up and operation of machine components;
- a skilled engineer involved in the installation, maintenance, repair, etc., of the machine must read all parts of this manual.

ADDITIONAL DOCUMENTATION

Along with an instruction manual, each machine is also supplied with additional documentation:

- **Wiring diagram:** a diagram of wiring connections is placed in the machine.
- **Installation sheet:** To be completed by the installer. Return a copy to the customer, the dealer and the manufacturer in order to activate the machine warranty

Before using the machine read carefully the instruction manual.
Carefully read safety instructions.



CONVENTIONAL SYMBOLS



CAUTION: ELECTRIC SHOCK DANGER
The staff involved is warned that the non-observance of safety rules in carrying out the operation described may cause an electric shock.



CAUTION DANGER FROM HIGH TEMPERATURES
This warns the staff involved that failure to abide by safety rules in carrying out the operation described involves the risk of burns and scalds.



CAUTION CRUSHING HAZARD
This warns the staff involved that failure to abide by safety rules in carrying out the operation described involves the risk of suffering crushed fingers or hands.



CAUTION: GENERAL HAZARD
The staff involved is warned that the operation described may cause injury if not performed following safety rules.



NOTE
It points out significant information for the staff involved.



WARNINGS
This warns the personnel involved that the non-observance of warning may cause loss of data and damage to the machine, or cause risks for noncompliance with any applicable law/ regulations.



PERSONAL PROTECTIONS
This symbol on the side means that the operator must use personal protection against an implicit risk of accident.



EQUIPOTENTIAL CONNECTION
For connecting all appliances with this type of connection.
Warning: do not connect to ground.



PRESSURIZED SYSTEM FOR EQUIPMENT USING R-744 (ISO 7000-1701)
It signals that the machine uses R-744 refrigerant in a transcritical refrigeration system.



READ THE INSTRUCTION MANUAL
It signals to the personnel involved that it is necessary to carefully read the instruction manual before using the machine.

SYMBOLOGY QUALIFICATION OF THE STAFF

The staff allowed to operate the machine can be differentiated by the level of preparation and responsibility in:



MACHINE OPERATOR
Unqualified personnel, without any specific technical abilities, capable of carrying out simple jobs, such as: operating the machine using the commands available on the keypad, the loading and unloading of products used during production, the loading of any consumable materials, basic maintenance operations, (cleaning, simple blockages, inspections of the instrumentation, etc.).



QUALIFIED ENGINEER
He/she is a skilled engineer for the installation and operation of the machine under normal conditions; he/she is able to carry out interventions on mechanical parts and all adjustments, as well as maintenance and repairs. He/she is qualified for interventions on electrical and refrigeration components.

CARPIGIANI



CARPIGIANI ENGINEER
He/she is a skilled engineer assigned by the manufacturer to interventions for complex jobs under particular conditions or in accordance with agreements made with the machine's owner.

SAFETY



When using industrial equipment and plants, one must be aware of the fact that moving parts (rotary motion), high voltage components, as well as parts subject to high temperatures may cause serious damage to persons and things.
The persons in charge of safety must ensure that:

- any incorrect use or handling is avoided;
- the safety devices are neither removed nor tampered with;
- the machine is regularly serviced;
- only original spare parts are used, especially in the case of safety-related components (ex.: protection microswitches, thermostats).
- suitable personal protective equipment is used;
- high care is taken during HoT product cycling.

To achieve the above, the following is necessary:

- at the work station an instruction manual relevant to the machine should be available;
- such documentation must be carefully read and requirements must consequently be met;
- only adequately skilled personnel should be assigned to electrical equipment and machineries; this appliance is not intended for use by persons (including children) with reduced physical, sensory or mental capabilities, or lack of experience and knowledge, unless they have been given supervision or instruction concerning use of the appliance by a person responsible for their safety;
- Make sure that no technician will ever carry out interventions outside his own knowledge and responsibility sphere;
- Children should be supervised to ensure that they do not play with the appliance.



IMPORTANT
Make sure that the personnel do not perform operations out of their range of knowledge and responsibility (refer to “Qualification of the personnel symbols”).



NOTE:
According to the standard in force, a QUALIFIED ENGINEER is a person who, thanks to:
- training, experience and education,
- knowledge of rules, prescriptions and interventions on accident prevention,
- knowledge of machine operating conditions,
It is able to realize and avoid any danger and has also been allowed by the person in charge of plant safety to carry out all kinds of interventions.

WARNINGS



The machine must be installed in compliance with current installation regulations.
When installing the machine, insert a differential magnetothermal protection switch on all poles of the line (see par. 2.3).

- Never perform operations on the machine using your hands, during both production and cleaning. Before carrying out any maintenance operation, make sure that the machine is in “**STOP**” position and that the main switch has been cut out.
- It is forbidden to wash the machine by means of a jet of pressurized water.
- It is forbidden to remove panels in order to reach the machine internal parts before disconnecting the machine from the power supply.
- The place of installation must not be exposed to water sprays, high moisture, heat or steam sources.
- The machine must not be installed in an area in which a water jet could be used
- The machine is not for external use
- Do not store explosive substances or spray cans inside the machine, nor aerosol cans containing flammable propellant.
- **CARPIGIANI** is not responsible for any accident that might happen during operation, cleaning and/or servicing of its machines if this warning has not been fully complied with.

1. GENERAL INFORMATION

1.1 GENERAL INFORMATION

1.1.1 Manufacturer's identification data

The machine has a data plate carrying manufacturer data, machine type and serial number, assigned when it is manufactured.
Copy of machine data plate to be found on first page of this handbook.

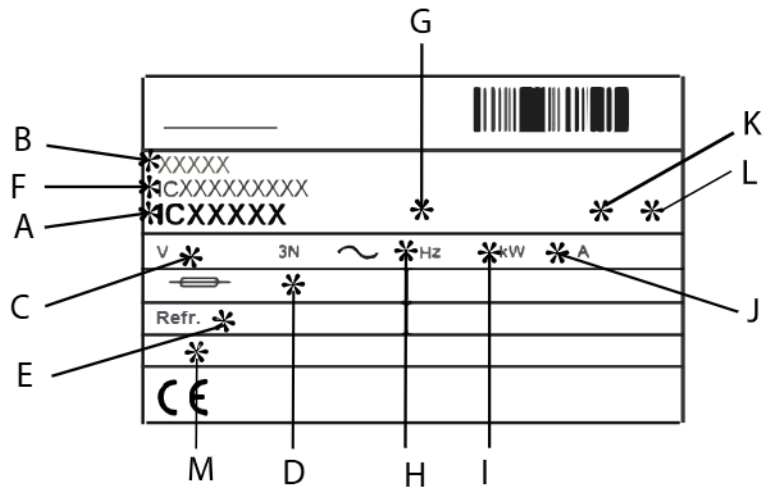

Legend:

A= Serial number
B= Machine type
C= Supply voltage
D= Fuse rating
E= Gas type and weight
F= Machine code
G= Condensation type
A=Air
W=Water
H= Frequency
I= Power
J= Rated current
K= IP code
L= Climate class
M= Greenhouse effect gas quantity

1.1.2 Information about service

All operations of routine maintenance are here described in section "Maintenance"; any additional operation requiring technical intervention on the machine must be cleared with the manufacturer, who will also examine the possibility of a factory technician field intervention.

1.1.3 Information to the user

- The manufacturer of the machine is at user's disposal for any explanation and information about the machine operation.
- In case of need, please call the local distributor, or the manufacturer if no distributor is available.
- Manufacturer's service department is available for any information about operation, and requests of spare parts and service.

1.2 INFORMATION ABOUT THE MACHINE

1.2.1 General data

Counter-top machine to immediately produce and distribute whipped cream in one flavor.
CARPIGIANI recommends to always use high quality mix for whipped cream production in order to satisfy your customers, even the most hard-to-please ones. Any saving made to the prejudice of quality will surely turn into a loss much bigger than the saving itself.

Bearing in mind the above statements, please take heed of the following suggestions:

- Follow closely instructions given by your mix supplier for the preparation and storage of the mixes.
- Taste whipped cream before serving it and start selling it only if entirely satisfactory.
- Make sure your staff always keeps the machine clean.
- Have your machine serviced always by companies authorized by **CARPIGIANI**.

1.2.2 Machine layout

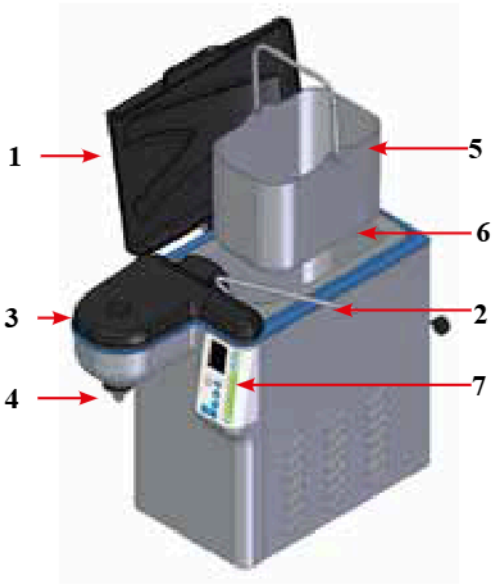

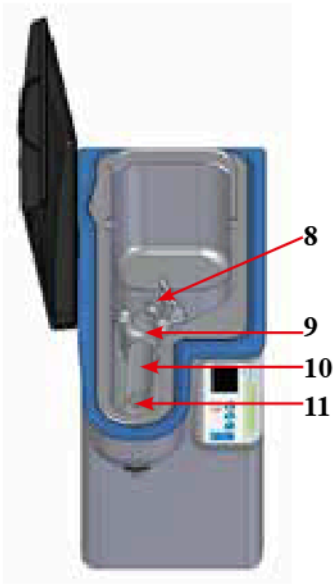

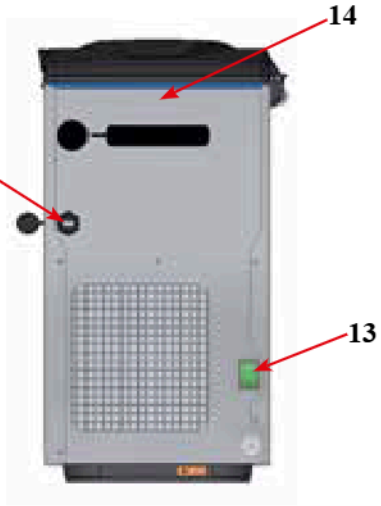

Legend:

1. Back cover lid
2. Mix feeding tube
3. Front cover lid
4. Dispensing area/Nozzle
5. Product tank
6. Refrigerated tank
7. Display/User interface
8. Air valve regulator
9. Pump
10. Texturizer Group
11. Dispensing valve
12. USB port

CAUTION

The USB port is only used to program the machine, do not connect any other type of device such as smartphones, batteries, etc. to it.

13. ON/OFF Switch
14. Teorema antenna

1.2.3 Technical features

Model	Tank capacity	Pumps	Electrical supply			Condenser	Installed power	Dimensions mm			Net Weight
	l		V	Phase	Hz		kW	L	P	H	Kg
NUVIA	6	YES	220-240	1	50-60	AIR	1	280	601	498	39

The following characteristics are purely indicative, Carpigiani reserves the right to make all the changes whenever necessary and without being bound to previous statements to the purchaser

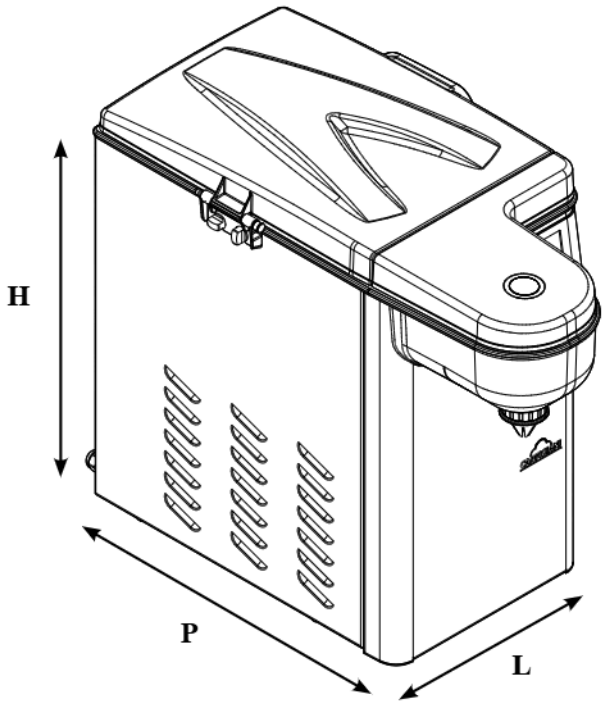

1.3 INTENDED USE

The machines must be used solely for the purpose described in chapter 1.2.1, "General information" within the functional limits described below.

Voltage	±6%
Min air temperature	10°C
Max air temperature	43°C
Max relative humidity	85%

This machine has been designed for use in rooms not subject to explosion-proof laws; its use is thus bound to complying rooms and normal atmosphere.

1.4 NOISE

The steady acoustic pressure level weighed A in a working place is less than 70 dB(A).

1.5 STORING A MACHINE

The machine must be stored in a dry and dump-free place.
Before storing the machine, wrap it in a cloth in order to protect it against dust and else.

1.6 DISPOSAL OF PACKING STUFFS



When opening the packing crate, divide packing stuffs per type and get rid of them according to laws in force in machine installation country.

1.7 WEEE (Waste Electrical and Electronic Equipment)



In conformity with the European Directives 2006/66/EC, on batteries and accumulators and waste batteries and accumulators, and 2002/96/EC, also known as WEEE, the presence of the symbol on the side of the product or packaging means that the product must not be disposed of with normal urban waste. Instead, it is the user's responsibility to dispose of this product by returning it to a collection point designated for the recycling of electrical and electronic equipment waste. Separate collection of this waste helps to optimize the recovery and recycling of any reclaimable materials and also reduces the impact on human health and the environment.
For more information concerning the correct disposal of this product, please contact your local authority or the retailer where this product was purchased.



2. INSTALLATION

2.1 ROOM NECESSARY TO THE MACHINE USE

The machine must be positioned at right angles on a horizontal bearing surface (max. tilt: 2°).
The machine must be installed on a horizontal surface in such a way that air can freely circulate all around its sides.
Rooms for the approach to the machine must be left free in order to enable the operator to act without constraint and also to immediately leave working area, if need be.

CAUTION

Machines with air-cooled condensers must be installed leaving a minimum distance of at least 30 cm above the top, 5 cm on the machine sides and 10 cm on the rear, for free air circulation around the condenser.

NOTE
An insufficient air circulation affects operation and output capacity of the machine.

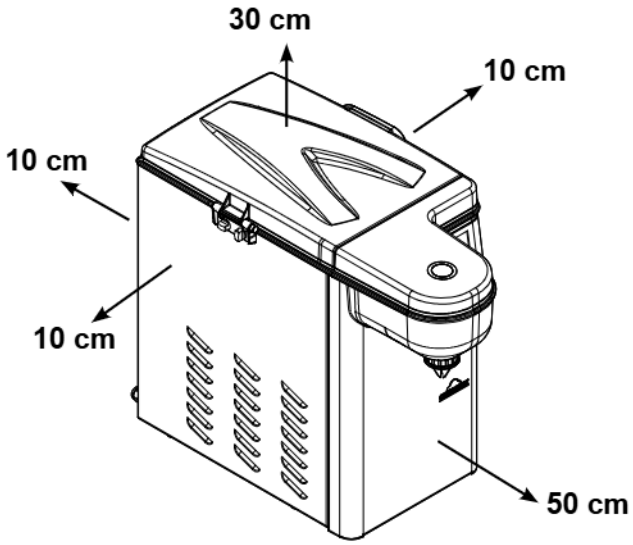

2.1.1 Handling the machine

Should it be necessary for any reason whatsoever to move the machine from its position, pay attention to the points used for handling it in order to avoid breaking any delicate parts that are not supposed to bear any load.
Lift the machine by grasping it from the bottom.



2.2 MACHINE WITH AIRCOOLED CONDENSER

Machines with an air-cooled condenser must be installed leaving a minimum distance from the walls of at least 30 cm above the machine, of 5 cm on the machine sides and 10 cm on the rear of the macine for free air circulation around the condenser.

NOTE
An insufficient air circulation affects operation and output capacity of the machine.

2.3 ELECTRICAL CONNECTIONS

The power supply system must comply with the national regulations in force in the place of installation and provided with an efficient ground connection.
The manufacturer is not responsible for any malfunction or for injury to persons and/or damage to property resulting from connection to a non-compliant electrical system.
The appliance must be installed according to the current regulations for electrical installation, by competent and qualified technical personnel meeting the technical and professional requirements provided for by the legislation in force in the country of installation.
Before connecting the machine to the mains, check that the mains characteristics meet those of the machine specified in the identification plate applied to the machine itself.
Check that the power supply network is provided with a disconnection device, in compliance with the installation rules, ensuring complete disconnection from the mains for each pole (differential circuit breaker), in the conditions of overvoltage category III. The opening distance of contacts must be at least 3 mm.
The trip level of the residual current device must be ≤ 30 mA, and in any case comply with local regulations.
To ensure proper interruption in the event of a ground fault, the residual current device must be at least of type A, F, or B (ref. IEC 60775), depending on the fault current that the machine may generate.

WARNINGS
The disconnection device must provide protective functionality by disconnecting power when required. If the device is not suitable, a fault condition may result in untimely or failed/delayed tripping, which could lead to serious hazards for the operator.

For machines equipped with a single-phase inverter connected between phase and neutral, use a device sensitive to high-frequency fault currents, at least type F, capable of detecting and interrupting multi-frequency residual currents.
For machines equipped with a three-phase inverter, use a type B device, which is also sensitive to DC faults.

NOTE
If the machine is equipped with a power cable, in case of three-phase machines with neutral, the blue wire of the power cable must be connected to the system neutral

WARNING
If the machine is fitted with a power cable, the yellow/green wire MUST be connected to an appropriate grounding of the electric system

2.3.1 Equipotential connection

Connection to external equipotential terminal is indicated by symbol .
It is present on the side or on the back of the machine, not to be connected to the protection ground.
The conductor to be used has a cross-section at least equivalent to the one of the connected conductor with greatest cross-section.

2.3.2 Replacing the power cable

If the machine power cable is damaged, replace it immediately with a cable with the same features. Replacement must be carried out by qualified personnel only.

3. DIRECTION FOR USE

3.1 MACHINE CONFIGURATION

The machine consists of motor drive for pump and of motor compressor for the cooling unit (with Air condensation).
After pouring in the cold liquid cream, properly stored as indicated on the label, dispensing can be started by pressing one of the relevant buttons. Thanks to the pump, the cream is already mixed with air and arrives at the texturizer tube that whips it. Adjust the amount of air by moving the regulator on the pump to modify the texture of the product.

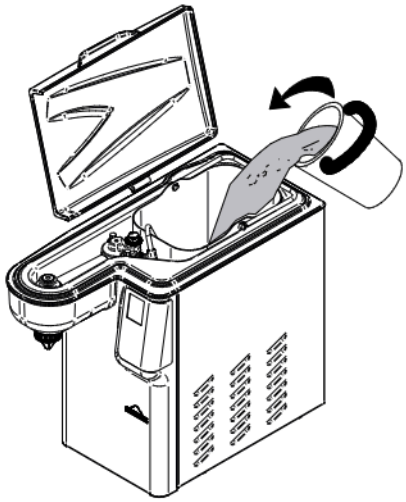

3.2 ELECTRONIC CONTROL KEYBOARD AND BUTTON FUNCTIONS

Details of the panel are shown in the picture below.

3.2.1 Controls

The machine is provided with a LCD display.
All the information about the machine status are displayed on screen at any time.
Furthermore, there are icons that can be used by the operator to interact with the machine.

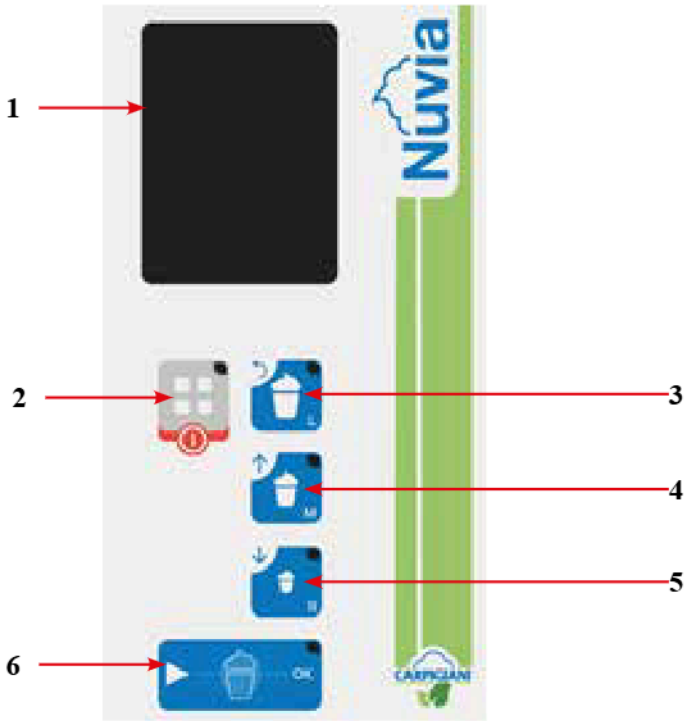

1 **LCD DISPLAY**		During the normal operation of the machine the screen shows: • Time of the day; • Temperature in the hopper, in Celcius/Fahrenheit degrees; • Function operating;
2 **MENÙ/ STOP**		By pressing this push-button during operation, the machine access to the user menu (Led ON) By pressing this button for 3 seconds the machine switches to STOP. In this function the machine does not cool and it is not possible to dispense cream. If the machine is left in Stop position, after 30” the message “Why in STOP?” will displayed and an intermittent beep will be emitted, so as to alert the user to set the machine to Production mode. To reset the "Why in STOP?" or any other alarm, press the stop button again
6 **PRODUCTION/ MANUAL DISPENSING/OK BUTTON**		By pressing this button from Stop mode, the display will show "COOLING" and the product temperature. From this function, "Manual Dispensing" is also possible by pressing and holding the Production/ Manual Dispensing button. In this case, as long as the button is held down, the delivery is activated and ends when the button is released. As long as the button is pressed, the relative LED is on. In "menu" this button confirm value/start procedure.
3-4-5 **AUTOMATIC DISPENSING BUTTON**		Press this button to dispense cream automatically with a preset time. • Pressing Large (pos.3), medium (pos.4), small (pos.5) the operator can dispense different amount of products (led on during dispensing). Once in the menu: • Press pos.3 button to go back to the previous page, pos.4 to increase or scroll up and pos.5 to decrease scroll down

3.3 PUMP AND AIR REGULATOR VALVE

The “air adjustment valve” allows the operator to regulate the product’s texture to achieve the required consistency. This adjustment valve is located on the top of the mix injection pump. This adjustment will regulate the amount of air into liquid mix being pumped through the pump. On the air valve are reported numbers indicating the opening or closing level of the valve.
To dispense a light fluffy product set the air valve at higher number (valve opening). If a heavier, creamy product is desired set the air valve at lower number (valve closing).

WARNING
Use the air regulator in position 0 (fully closed) for only a few seconds to prime the product.
Avoid over-opening the air regulator to prevent the product from buttering (product with too much torn structure or blocked dispensing)

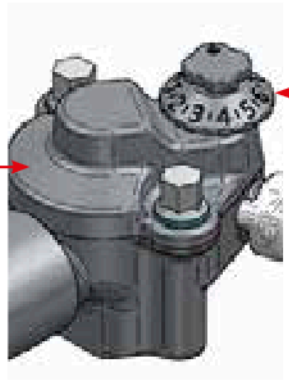

3.4 TEXTURIZER, DISPENSING VALVE AND NOZZLE.

The texturizer and dispensing valve are also important parts used to dispense whipped product from this machine. The texturizer is used to whip the product that is pressurized by the mix injection pump. The texturizer consists of a two metal pipes, one insIde the other, covered by a metallic tube. The texturizer and tube are connected to the pump cover on one end and the dispensing valve on the other end. The pressurized liquid is pumped through the channeled texturizer, which whips the product. The whipped product is then transferred to the dispensing valve and dispensed.
At the bottom of the dispensing valve there is a nozzle composed of a screwed plastic part and a removable magnetic metal part. Rotate the plastic part of the nozzle counterclockwise to remove it.
In order to dispense the product, place a cup or a cone under the nozzle and press dispensing button. As soon as the product comes out, twist the cup or the cone to form a cone-shaped serving.
When the portion has reached the desired size, release the manual dispensing button and quickly pull the cone or the cup down in order to sharpen the tip. For pre-selected (ref.3, 4, 5 user interface) portion press once and release.

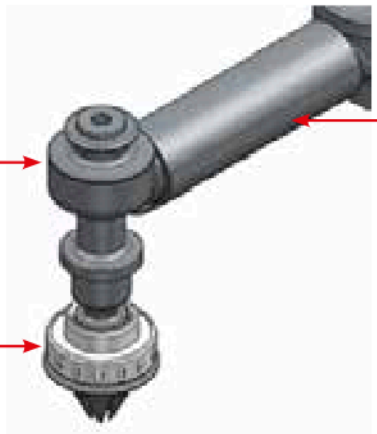

3.5 PRELIMINARY OPERATIONS, WASHING AND SANITIZATION

Before starting the machine for the first time, it is necessary to thoroughly clean its parts and above all sanitize all parts coming into contact with the cream.
Use a MILD DETERGENT SOLUTION for washing (neutral detergent).
Use DRINKABLE WATER (bacteriologically pure) for RINSING.

1. Turn the machine switch off.
2. Remove the nozzle, the texturizer and the pump, disassemble them and remove the gaskets. Wash all of the parts carefully and rinse them.
3. Wash and rinse the removable tank.
4. Reassemble all of the parts after having lubricated them as needed.
5. Do not touch sanitized parts with your hands, paper towels, cloths, etc.



IMPORTANT NOTE!
Refer to Chapter 5 in this manual for further information.

For the detailed procedure see the chapter section 5 of this manual.



WARNING
The C.I.P. (Cleanin In Place) wash cycle must be carried every day at least once per day as a habit and with utmost care, in order to secure quality of production in the observance of healthy rules.

3.6 PRODUCTION AND DISTRIBUTION OF WHIPPED CREAM

After installing the machine according to the instructions contained in the chapter INSTALLATION,
and after carefully cleaning and sanitizing the machine, proceed as follows.

3.6.1 Choosing the liquid cream

Always use cream in a perfect state. For the best whipped cream use cream with a minimum 32% fat content (animal fats). Different products with a lower or higher fat content and origin are available for the production of a good whipped cream. In such cases, before starting the production, follow the manufacturer's directions and test the product obtainable with your machine.
If you want, before pouring the product into the tank, sweeten the liquid cream with liquid sugar or 100 gr castor sugar per liter of liquid cream.
We suggest to do not add more than 100 gr sugar per liter; the more the cream is sugared, the lower its overrun will be.



ATTENTION
Make sure that sugar has been thoroughly dissolved into the cream because sugar lumps may obstruct the cream whipper and damage the pump.



WARNING
NEVER add solid stuffs, such as hazel nuts, cocoa powder and the like to the cream. They would not pass through the pump and would quickly wear it out.

3.6.2 Machine Startup

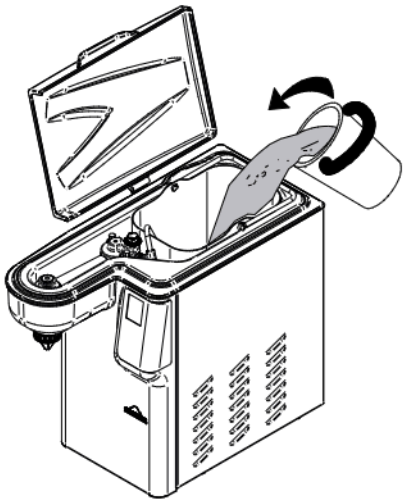

1. Press the ON/OFF switch (ref. 13, page 10) to turn on the machine, then activate the cooling process by pressing the production button (button 6).
2. The display shows “Cooling”.
3. Open the hopper rear cover and fill the product tub with fresh cream (maximum quantity: 6 L, minimum qty. for first filling: at least 1 L).
4. The cream must be at a temperature of 4°C.
5. Ensure that the mix feeding pipe (ref. 2, page 10) is correctly inserted into both the pump (ref. 9, page 10) and the product tub (ref. 5, page 10).
6. Close the hopper rear cover and wait for the display to show “Product Ready”.
7. Open the hopper front cover and place the air adjustment valve (ref. 8, page 10) to position 0 (see section 3.3);
8. Press the manual dispensing button  for a few seconds until the product flows out in liquid form from the nozzle.

CAUTION

If no product is dispensed after a few seconds, stop pressing the button. Forcing operation may cause the paddle and the pump gaskets to overheat and get damaged due to dry running. Stop the suction procedure and identify the issue.

9. Adjust the setting of the air adjustment valve (ref. 8, page 10) by turning it counterclockwise to loosen the screw and increasing the number until the required product consistency is achieved (see section 3.3).
10. Close the hopper covers.

3.7 STORAGE

This cream whipper is provided with a thermostatic controlled storage system ensuring good storage of the cream. Machine stores product at refrigeration temperature set. You will save significantly on energy consumption, as the compressor runs only for the time strictly necessary in order to keep product at its correct temperature.

WARNING

NEVER leave cream in the machine when it is not operating.

WARNING

In case of extended downtime, discard a few portions of product and thoroughly clean the nozzle before resuming sales.

3.8 PROGRAMMING FOR USER

To access the User Programming with the machine in Stop mode, press button.
Then, the display shows some sub-menus that can be selected with the Increase/Decrease buttons:

- Cleaning — Performing the Cleaning in Place cycle (C.I.P.) or confirming the washing cycle
- Speed — Dispensing pump speed setting
- Dispensing Time — Setting the dispensing duration associated with the buttons
- Date — Date setting
- Hour — Time setting
- Alarms — Display of active alarms
- Events — Display of events
- Information — Display of machine version, software, countdown for washing
- Language — Language setting
- Autosetup — Resetting user parameters to factory settings
- Parameters — User parameter setting

To access a sub-menu, press OK button.

- In sub-menus with editable values, the value outlined is the one that can be modified.

Pressing OK turns the outline BLUE, indicating that you can change the value using the Increase/Decrease buttons.
Press OK again to store the value and return to scrolling through the steps (the outline turns black again).
To store the value, you need to press OK.

Exit the menu by pressing the Menu/Stop button .

If you want to return to the previous menu instead, press Back .

Cleaning

By selecting this function, a new page opens up, featuring 2 options: • C.I.P. (Cleaning In Place procedure) • Maintenance wash (Maintenance wash with disassembly of parts)	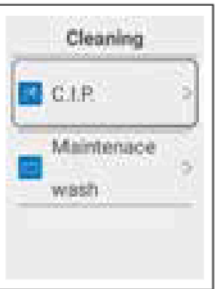
The C.I.P. function is required for performing semiautomatic washing.	

Speed

You can select the speed during dispensing for all dispensing types from the 3 available options.	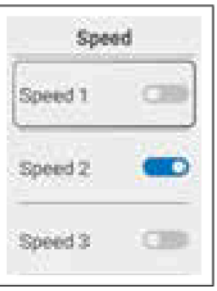

Dispensing time

It is possible to set the dispensing duration in seconds associated with these three buttons: Small, Medium, and Large.	

Date

By pressing OK, the display shows the following 3 options under Date: - Day - Month - Year With the value alongside. The values can be modified as explained at the beginning of the paragraph.	

Hour

The time modification procedure is like that for the date. The values are: - Hour - Minutes - Seconds	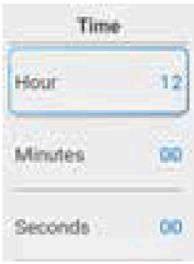

Note: Check date and time periodically to avoid significant deviations over time.

Alarms

List of Active Alarms It is possible to scroll through the alarms by pressing the Increase and Decrease buttons.	

Events

The display shows - The event number (last one stored) on the first line - The event on the second line - Time and date on the third line	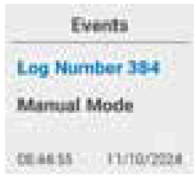

Some events are not related to function changes or alarms:

Name	Description
Local Param. Update	Parameter updated locally with the keyboard
Remote Param. Update	Parameter updated remotely (Teorema)
User Autosetup	User Autosetup Done
Inconsistent Backup	Data not backed up at switch-on/time loss
C.I.P. Completed	The C.I.P. has been completed. The countdown for the next washing cycle begins now
Washing Completed	The user has confirmed that the maintenance washing cycle has been performed. The countdown for the next C.I.P. and maintenance washing cycles begins now.
Manual mode (Stop)	The user has entered the user menu (user programming function) with the machine in Stop mode
Manual mode (Prod/Stor)	The user has entered the user menu (user programming function) with the machine operating in Production/Storage mode

Information

The display shows various information. The Display sw version on the first line The sw version of the I/O board (CPU - Slave) on the second line The time until the next C.I.P. cycle on the third line The time until the next maintenance wash on the fourth line The Webgate signal strength on the fifth line	

Language

Language selection (English / Italiano / Francais / Deutsch / Espanol / Portugues, Japanese).	

Autosetup

The operation resets all user programming values to the default values (speed, dispensing time, text size). Pressing OK confirms, while pressing Stop cancels the operation.	

Parameters

You access the user programming function. The display will read: - the step description - the step number - the step value Pressing OK  will display an arrow next to the value in the parameters, indicating that the value can be modified using the Increase/Decrease buttons. The editable parameters are: • Termperature format • Time format • Date format • Menu Text Dimensions	

4. SAFETY DEVICES

4.1 ALARMS

The machine notifies the operator of possible alarms by displaying them on the display.
If an alarm has occurred and then reset, the alarm disappears from the display but is stored in the events.

To reset the alarm message, press the OK button 

If the alarm is still active, it will be displayed again after 10s.
The machine can be used for Production even if there is an alarm. In the case of a critical alarm, the machine will not allow Production. In this case, press STOP and do not use the machine until it has been repaired.
The alarms can be:

red (critical)

yellow (warnings)

The table below lists the alarms:

Name	Severity	Action required
Alarm Probe TAMB CA	Critical	Call Technician
Alarm Probe TAMB CC	Critical	Call Technician
Alarm Probe TEV CA	Critical	Call Technician
Alarm Probe TEV CC	Critical	Call Technician
Alarm Probe TGL CA	Critical	Call Technician
Alarm Probe TGL CC	Critical	Call Technician
Alarm Probe TOMC CA	Critical	Call Technician
Alarm Probe TOMC CC	Critical	Call Technician
MP Thermal Input Alarm	Critical	Check the proper ventilation of the machine. Check that the installation space requirements are met and that the rear air vent grid is clean.
C.I.P. Failed. Add water or close the air regulator	Warning	During a phase of the C.I.P. cycle, either the water ran out or the air regulator was not fully closed to position zero. Required actions: Add water to the tub so that there are at least 2.5 liters, or close the air regulator by turning it clockwise to position zero. Once the alarm has been reset by pressing the OK button, the machine will restart the C.I.P. phase where the alarm occurred.
Autosetup User	Warning	Stored in the events. User Autosetup Done
Stor. Failed. Wash and replace product.		The machine was turned off while in Production/ Storage mode for a duration exceeding the value indicated in the time-temperature table Corrective actions : replace the product and perform the disassembly and washing procedures.
Start Compressor MC Fault	Critical	Call Technician
Modbus Error I/O	Critical	Call Technician
Webgate Comm. Error	Warning	Call Technician
Inv. MC Error xxx	Critical	Call Technician
MC PR Input	Critical	Call Technician
Inv. MC Phase Missing	Critical	Call Technician
Inv. MC Rotor Locked	Critical	Call Technician
Inv. MC Undervoltage	Critical	Call Technician
Inv. MC Sw Overcurrent	Critical	Call Technician
Inv. MC Overpower	Critical	Call Technician

Inv. MC Overvoltage	Critical	Call Technician
Inv. MP Error xxx	Critical	Call Technician
Inv. MP Ext. Input	Critical	Call Technician
Inv. MP Phase Missing	Critical	Call Technician
Inv. MP Undervoltage	Critical	Call Technician
Inv. MP Sw Overcurrent	Critical	Call Technician
Inv. MP Overpower	Critical	Call Technician
Inv. MP Overvoltage	Critical	Call Technician
Daily Cleaning Not Done	Warning	Reminds that the daily C.I.P. is expired. Press Ok to acknowledge the alarm, and do the Cleaning in Place procedure.
Wash today	Notice	The scheduled washing days have expired. Corrective actions: perform the disassembly and washing procedures
Power Off	-	Machine was turned off. (visible only in event page)
Modbus Inverter MC	Critical	Call Technician
Modbus Inverter MP	Critical	Call Technician
MWG Change Hour	Warning	Every time change generated by the MWG will be stored in the events.
MWG Change TimeZone	Warning	Every TimeZone change generated by the MWG will be stored in the events, including automatic adjustments for daylight saving time and standard time.
Why in Stop?	Warning	If the machine is left in Stop position, after 30" the message "Why in STOP?" will displayed and an intermittent beep will be emitted, so as to alert the user to set the machine to Production mode.
Power On	Warning	Machine was turned on. When the machine is turned on, a reminder popup appears. If the machine was not restarted voluntarly, this means that a blackout occured. Check events to see the time when it happened.
Pump Rotor (MP Inv.)	Critical	Rotor locked or no load on MP. Corrective actions: check whether the pump is mounted correctly. If it is not so, disassemble it and clean it by greasing the seals in contact with the rotor. Alternatively, ensure that product is actually present. If this does not solve the issue, contact technical support
High Exhaust Temp (TOMC)	Critical	Call Technician

4.2 BLACK-OUT



In case of powers supply failure, if the machine was in STOP, remains in STOP at the power return.
If the machine was in Production or Cooling, upon the return of power, the machine will check the temperature and duration of the power failure; if the time is longer than the time indicated in the table, the machine will display the alarm “Wash machine and replace product!” The machine will forced C.I.P. cycle.
Otherwise, if the time is less than that shown in the table below, the machine will return to storage.

Product temperature	Time
≥ 15°C	10 minutes
10°C ÷ 15°C	20 minutes
5°C ÷ 10°C	120 minutes

If a C.I.P. cycle phase is interrupted due to a power failure, only that specific phase must be repeated from the beginning, not the entire procedure.

5. CLEANOUT DISASSEMBLING AND REASSEMBLING OF PARTS IN CONTACT WITH THE PRODUCT

5.1 GENERAL DESCRIPTION



Cleaning and sanitisation are operations that must be carried out habitually and with maximum care at the end of each production run to guarantee the production quality and respect the necessary hygienic norms.
Giving dirt the time to dry out can greatly increase the risk of rings, marks and damage to surfaces.
Removing dirt is much easier if it is done immediately after use because some elements containing acid and saline substances might corrode the surfaces. A prolonged soaking is not recommended.

5.2 WASHING CONDITIONS



- Avoid using solvents, alcohol or detergents that could damage machine parts or pollute the functional production parts.
- For increased safety, avoid using sanitizers with very strong active ingredients, as they may be too aggressive for daily use or for sensitive surfaces. The use of cleaning/sanitizing agents such as bleach, ammonia, muriatic acid, or descaling agents may damage the composition of the steel by staining or irreversibly oxidizing it, and may also damage plastic components.
- Never use powder or abrasive cleaning products, scourers or pointed tools when cleaning by hand: these may dull the surfaces, remove or weaken the protective film on the surface by scratching it.
- Never use metal or synthetic scouring pads under any circumstances to prevent any abrasion or removal of ferrous parts leading to problems of surface oxidation or weakening.
- Do not use dishwashers and their detergent products.

5.3 TIPS



- Perform all washing and refitting operations using the disposable gloves and replacing them when required.
- To wash the parts use a neutral cleaning solution and the brushes supplied, previously sanitized.
- Wash (manually) the parts in water (max 60°C), using a neutral detergent and the supplied cleaning brushes.
- To rinse them use drinkable water (bacteriologically pure).
- To sanitise leave the disassembled parts in lukewarm sanitized water for the time indicated on the label of the product used (avoiding prolonged contact), use the supplied cleaning brushes to forcefully brush all components and the holes present on the components, then rinse them using drinkable water +(bacteriologically pure).
- At the end of the washing, and before repositioning each component, dry everything with a soft and clean cloth, suitable for food contact, to avoid any type of humidity rich in mineral salts and chlorine from building up on the metal surfaces and leaving opaque traces.
- Place the components on a clean and sanitized tray to air-dry.

Carpigiani recommends the use of a cleaning/sanitising solution to wash the machine.
The use of a cleaning/sanitising solution optimises the washing and sanitising procedures in that it eliminates two phases of the procedure (a rinse and a washing phase). Basically, the use of a cleaning/ sanitising solution saves time by facilitating and simplifying washing/ sanitising procedures.

WARNING

Avoid using highly acidic or alkaline sanitizers, as they may compromise the integrity of the components and impair their proper operation.

Every time the machine is washed and the parts that come into contact with the cream are disassembled, it is essential to carry out a visual inspection of all the parts made in thermosetting, plastic, elastomer-based and silicon-based materials and metal (such as paddle, air valve, pump gaskets, sealing membrane, etc.). All parts must be integral and not worn, without cracks or splits, or opaque if originally polished/transparent. Carpigiani declines all responsibility for any damage caused by imperfections and/or undetected breakages and not promptly solved by the replacement with original spare parts. The manufacturer is available for consultation and for any specific requests made by the customer.



5.4 HOW TO USE CLEANING/SANITISING SOLUTION

Prepare a solution of water and sanitising detergent following the instructions shown on the label of the product being utilised.

Washing/sanitizing by soaking:
- Remove larger residues by hands;
- Remove finer residues with water jets;
- Soak the assembled parts to clean in the solution;
- Use the supplied cleaning brushes to forcefully brush all components and the relevant holes;
- Allow the solution to work for the time indicated on the label of the product used;
- Rinse the parts with care, using plenty of drinkable water;

5.5 DAILY CLEANING

5.5.1 CIP counter

At the end of 24 h of storage or since the last time a C.I.P cycle was completed, the alarm "Daily Cleaning Not Done" will appear on the display. To reset this alarm and be able to dispence product, a new C.I.P cycle must be performed.

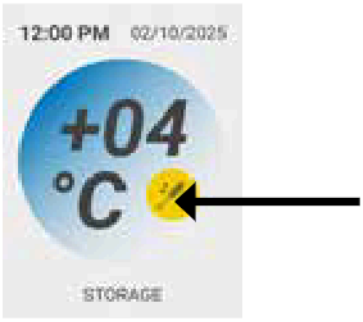

5.5.2 Cleaning in place - semiautomatic cycle

It is essential that you carry out CLEANING and SANITIZATION of the machine, every day, also considering bacteriological quality of your mix as well as on health regulations in force in your country.
Every day, it is necessary to perform the cleaning in place procedure as reported below:

1. Put on disposable gloves and prepare the sanitizing solution in a clean bucket, following the manufacturer's instructions.
2. Open the machine rear cover.
   Rotate the cream feeding pipe upward, remove the product tub, and clean the pipe with a clean cloth soaked in sanitizing solution, then tilt it to the right to complete the rotation.





CAUTION
Remove the tub containing any residual product and handle the product according to your HACCP protocol.

3. During the C.I.P. procedure, or at least once a day, clean the product tub containing the cream. After removing cream residue, dip the tub in cleaning solution. Use the supplied cleaning brushes to scrub thoroughly. Rinse with care, using plenty of clean drinking water.
4. Place the cleaned product tub or the jug provided in the machine hopper and fill it with at least 2 L of microbiologically pure water (at room temperature).
5. Turn the feed tube downward into the product tub/jug, and make sure the feed tube is at the bottom of the container.
6. Place an empty bucket with at least 2.5 L capacity under the machine dispensing outlet.
7. Rotate the air regulator clockwise until it is completely closed in position 0 and select the C.I.P. cycle from the User menu. Press OK to activate the cycle. When the first rinse is complete, discard the water from the bucket and remove any remaining residue from the product tub/jug.

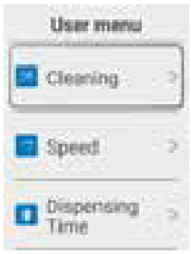



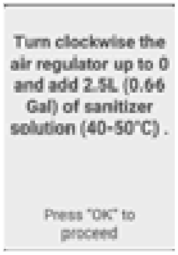



CAUTION

After starting the cycle, if water is not dispensed, stop the cycle by pressing STOP and identify the issue. If the pump is running but no liquid is passing through, the paddle and gaskets may overheat and get damaged within seconds

8. Remove the metal nozzle, dip it in a bucket filled with sanitizing solution, and scrub it using a sanitized brush.



9. Spray the plastic part of the nozzle (where the metal part has been removed) with the sanitizing solution and scrub with a small sanitized brush. Wipe the area with a clean cloth soaked with sanitizer. Refit the metal nozzle.
10. Fill the product tub or alternatively, the jug provided with at least 2 L of lukewarm sanitizing solution at 40°C-50°C.
11. Place an empty bucket with at least 2.5 L capacity under the dispensing outlet.
12. Press the OK button to start the automatic procedure. When the cycle is complete, discard the solution from the bucket and remove any residue from the product tub/jug.





13. Fill the product tub/jug with at least 2 L of cold water (or room temperature water, if cold water is not available) at 20°C-25°C.
14. Place an empty bucket with at least 2.5 L capacity under the dispensing outlet.
15. Press the OK button to start the automatic procedure. When the cycle is complete, discard the solution from the bucket and remove any residue from the product tub/jug.



16. Clean the splash areas using a clean cloth soaked in sanitizing solution, paying special attention to the machine front panel, covers, hopper rim, and internal areas.
17. Fill the product tub with fresh cream at a storage temperature of 4°C, then dispense and discard 3 small portions of cream.

5.6 SCHEDULED CLEANOUT

5.6.1 Programmed maintenance cleaning - Maintenance Washing

To ensure that the machine continues to run without ever blocking, provide the necessary maintenance periodically.
The machine is equipped with a 30-day counter, which automatically resets each time a maintenance cleaning is performed.

When the previous maintenance washing cycle has expired, or if the failed storage alarm is active (requiring a washing cycle), the following icon is displayed in the top left of the home screen:

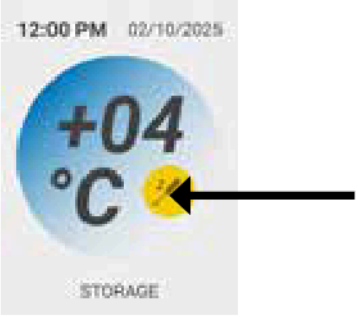

WARNING

Cleanout and sanitization must be carried out at the programmed date indicated on the display, as a habit and with utmost care, in order to secure quality of production in the observance of healthy rules.

5.6.2 Disassembling

1. STOP the machine by pressing and holding the stop button for 3 seconds.
2. Remove front and rear cover.
3. Unscrew the nozzle (the metal end of the nozzle has a coupling to the plastic body, pull to remove it).



4. Lift the feeding pipe, tilt it to the right and remove the product tub.





5. Remove the two screws holding the pump in place, using the appropriate tool.

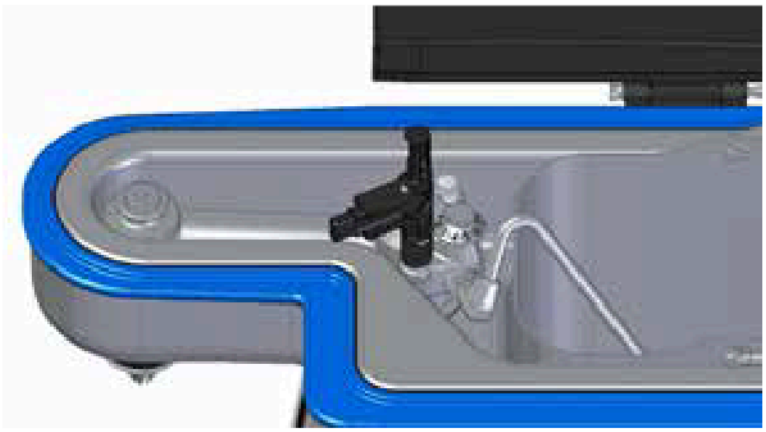

6. With two hands remove the entire production unit (dispensing valve, texturizer, pump).



7. Release the pump body and product dispensing valve from the texturizer pipe by rotating the 2 parts in opposite directions.



Texturizer removal

Remove the metal pipes of the texturizer by sliding them out

CAUTION
Be careful not to turn the texturizer body downward. The inner part could fall and be damaged



Dispensing valve removal
Unscrew the valve head counterclockwise using the appropriate wrench as shown in the figure. Lift the diaphragm.

CAUTION
When reassembling, pay attention to the correct positioning of the diaphragm





Pump removal
Remove the feeding pipe by simply pulling it from the fixing body. Remove the fixing body from the pump body by turning it until the correct position to release it is found

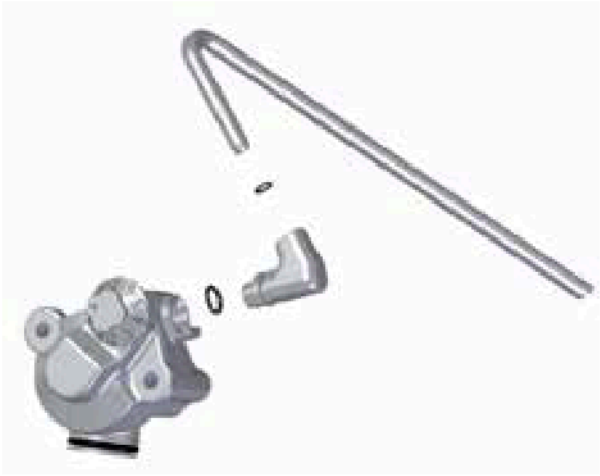

Lift the pump cover and separate it from the body.



Using the appropriate tool, remove the shaft by pushing it from the lower side. Slide the blade out sideways





WARNING

Check the wear condition of the paddle. If a noticeable step is present, replace the part to avoid compromising product dispensing

Using the appropriate tool, push the bushing and remove the tapered gasket fitted in the lower part of the pump body using the small protrusion of the tool as shown in the figure.





With the same tool, pull using the protrusion of the tool to engage the bushing and pull out the conical gasket contained in the pump cover

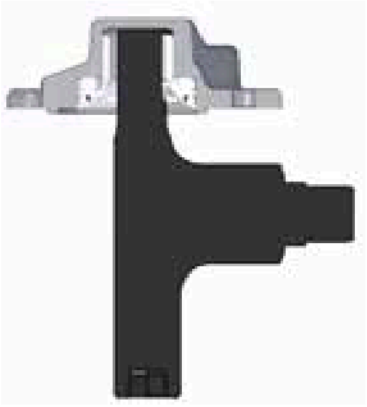



Unscrew the entire air adjustment valve unit counterclockwise to access and be able to remove the diaphragm valve under it.

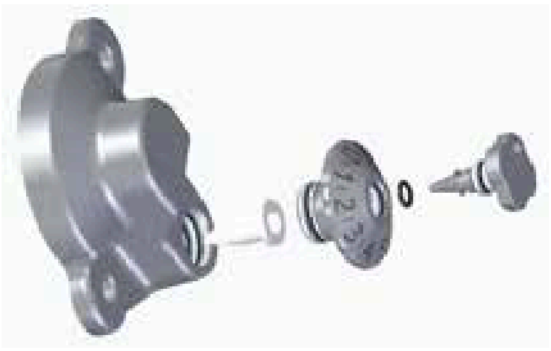

Remove all gaskets using the puller supplied as standard.



5.6.3 Washing, sanitizing and refitting the components

1. Remove larger residues by hand.
2. Remove finer residues with a jet of water.
3. Prepare a solution of water and sanitizer following the instructions shown on the label of the product.
4. Clean all parts and their openings with a neutral detergent, using the supplied brushes to scrub thoroughly.
5. Dip all parts in the sanitizing solution and let it react for the time indicated on the label of the product being utilized.
6. Let the sanitizing solution react for the time indicated on the label of the product being utilized.
7. Rinse all parts with care, using plenty of clean drinking water.
8. Place the components on a clean tray to air-dry.
9. Dip a brush in the sanitizing solution and use it to clean pump and feeding pipe housing holes.
10. Spray the chilled hopper walls with the sanitizing solution.
11. Dip a brush in the sanitizing solution and clean the chilled hopper.

Repeat steps 9, 10 and 11 several times.

12. Lubricate all gaskets with the supplied product.
13. Refit the disassembled parts carrying out the disassembling operations in reverse order.
14. Use the appropriate tool as shown in the figure to facilitate the assembly of the bushing and conical gaskets of the cover and pump body.

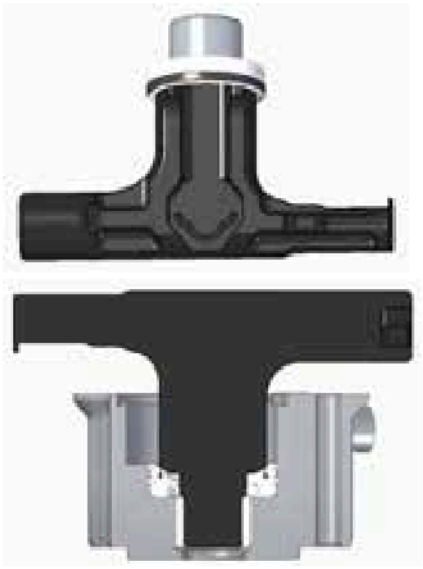



15. Assemble the pump



CAUTION

Refit the sealing gasket between the pump body and the pump cover, making sure it is properly positioned. The gasket must be fitted both in the seat around the rotor and in the seat beneath the air regulator

16. Insert the 2 parts of the texturizer into the metal pipe and apply the seal at the end



17. Reassemble the pump, texturizer and product dispensing valve

CAUTION.

Reassemble the texturizer so that the seal is in contact with the pump and not with the dispensing valve

Insert the feeding pipe on the pump body and insert the whole unit into the machine. Screw in the nozzle and pump retaining screws using the supplied key.

5.7 SANITIZATION

WARNING

Operating the pump for too long with empty hopper or just filled with water and cleaner or sanitizer causes quick wear. Operate the machine with water and sanitizer inside it only during the C.I.P. procedure.

CAUTION

Do not touch the sanitized parts with your hands, paper towels, cotton cloths, etc.

1. Select "Man. Washing" from the User menu. Press OK to confirm that the machine has been washed. This confirmation resets any "Daily washing not done", "Wash today," and "Storage failed" alarms.

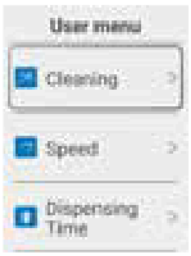





2. Prepare the sanitizing solution in a clean bucket following the manufacturer's instructions. Remove the metal nozzle, dip it in a bucket filled with sanitizing solution, and scrub it using a sanitized brush.Spray the plastic part of the nozzle (where the metal part has been removed). Wipe the area with a clean cloth soaked with sanitizer. Remove the nozzle.



3. Place the cleaned product tub in the machine hopper and pour in 2.5 L of lukewarm sanitizing solution at 40°C-50°C.
4. Lower the feeding pipe into the product tub.
5. Place an empty bucket with at least 2.5 L capacity under the machine dispensing outlet.
6. Rotate the air regulator clockwise until it is completely closed in position **0.**
7. Press “OK” to start the automatic procedure. When the cycle is complete, discard the solution from the bucket and remove any residue from the product tub.





8. Fill the product tub with 2.5 L of cold water (or room temperature water, if cold water is not available) at 20°C-25°C.
9. Place an empty bucket with at least 2.5 L capacity under the machine dispensing outlet.
10. Press the “ok” button to start the automatic procedure. When the cycle is complete, discard the solution from the bucket and remove any residue from the product tub.



11. Pour cream into the product tub at a storage temperature of 4-6°C. Then, dispense and discard 3 portions of cream.

5.8 HYGIENE

Mix fat contents are ideal fields for proliferation of mildew and bacteria.
To eliminate them, the parts in contact with the cream must be thoroughly washed and cleaned. Stainless steel as well as plastic and rubber materials used for manufacturing these parts and their special design facilitate cleaning, but they cannot prevent the growth of mildew and bacteria if they are not cleaned properly.

6. MAINTENANCE

6.1 SERVICING TYPOLOGY

ATTENTION
Any servicing operation requiring the opening of machine panels must be carried out with machine set to stop and disconnected from main switch
Cleaning and lubricating moving parts is forbidden
Repairs of electrical and freezing plants must be carried out by skilled engineers/ technicians



CAUTION
The system contains high-pressure refrigerant.
Do not tamper with the system.
Maintenance must be carried out only by properly qualified personnel.



Operations necessary to proper machine running are such that most of servicing is completed during production cycle.
Servicing operations, such as cleaning of parts in contact with the product are to be carried out at the end of a working day, so as to speed up serving operations required.
Herebelow you can find a list of routine servicing operations:

- **Clean out of panels**
  To be carried out daily, with neutral soaps.

- **Clean out and sanitization**
  To be carried out at the end of every working day according to procedure described in section 5.

WARNING
Never use abrasive sponges to clean machine and its parts, as their surfaces might be scratched.



6.2 AIRCOOLING

Clean condenser, periodically, so as to remove dust, paper and what can prevent air from circulating.
For clean out, use a brush with long bristles or a bolt of compressed air.

ATTENTION
When using compressed air, put on personal protections in order to avoid accidents; put on protective glasses!



ATTENTION
NEVER USE SHARP METAL OBJECTS TO CARRY OUT THIS OPERATION. GOOD WORKING OF A FREEZING PLANT MOSTLY DEPENDS ON CLEANING OF CONDENSER.



6.3 ORDERING SPARE PARTS

If one or several parts are worn or broken, refer to your dealer to order all necessary spare parts.

ATTENTION
Before using spare parts and/or supplied parts intended to come into contact with the product on the machine, it is absolutely necessary to clean and sanitize them as indicated in sec. 5 of this manual.



For proper cleaning, use the accessories supplied with the machine and replace them periodically, based on the frequency of use, and in any case whenever they are worn and/or deteriorated.
Replacement with original parts is recommended.

7. TROUBLESHOOT GUIDE



Trouble	Cause	Solving
With power ON, no product dispenses from machine and button pressed and motor runs	1. Pump knobs loose: 2. Texturizer clogged. 3. Pump blade worn. 4. The pump did not engage 5. Product too thick 6. Pump beating locked up	1. Tighten knobs 2. Disassemble and brush clean, sanitize and reassemble. 3. Replace pump blade. 4. Try again with zero air 5. Use a less dense product 6. Pump gaskets have not been lubricated. 7. Call a Carpigiani authorized Service Company
Product dispenses poorly whipped and/or wet looking	1. Product has separated. 2. Low air incorporated. 3. Pump and/or texturizer clogged. 4. Texturizer tube worn.	1. Drain machine, clean, sanitize and restart with fresh cream. 2. Move air regulator to number set higher. 3. Drain machine, clean, sanitize and restart with fresh cream. 4. Replace metallic texturizer tube .
Product dispense slowly or intermittently	1. No liquid cream in tank. 2. O-ring/seals worn or damaged. 3. Air valve regulator excessivly open. 4. Slow production speed set. 5. Buttered product.	1. Refill mix tank with liquid mix. 2. Replace and lubricate all o ring and seals 3. Move air regulator to number set lower 4. Set a higher speed 5. Disassemble and wash all components
Product does not stay cool, but machine is dispensing and running	1. Switch or motor problem.	1. Call a Carpigiani authorized Service Company
Dispense button does not active pump drive motor	1. Pump beating locked up:	1. Pump gaskets have not been lubricated. 2. Call a Carpigiani authorized Service Company.
No switch functions working	1. No power coming to the machine. 2. Switch problem.	1. Check power supply. 2. Call a Carpigiani authorized Service Company.