Serving trolley 1905

	Order number	Price
Serving trolley 1905 - 2	V1-040100-0006	
Serving trolley 1905 - 2 , Wheels, supersoft, 125mm	V1-040100-0024	
Serving trolley 1905 - 2 , Wheels, supersoft, 150mm	V1-040100-0023	
Serving trolley 1905 - 3	V1-040100-0007	
Serving trolley 1905 - 3 , Wheels, supersoft, 125mm	V1-040100-0025	
Serving trolley 1905 - 3 , Wheels, supersoft, 150mm	V1-040100-0026	

Specification list	1905-2	1905-3
Width (x) [mm]	1053	1053
Length (x) [mm]	530	530
Height (x) [mm]	970	1070
Number of inserts for trays	2	3
Lifting capacity [kg]	max. 50 kg per shelf	max. 30 kg per shelf
Wheels	ø 125 mm, 2 with brake	
Material	Stainless Steel	

Technical drawing

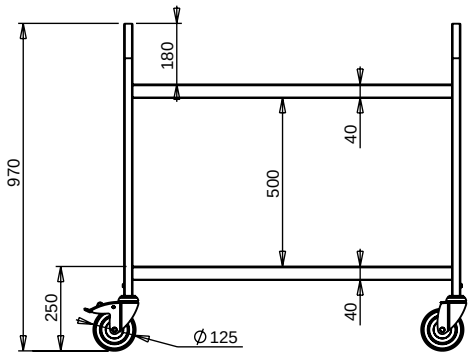

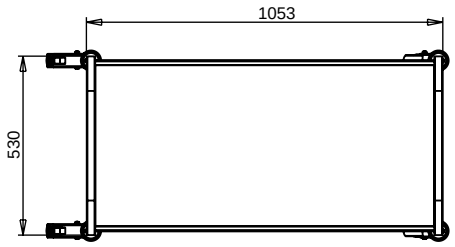

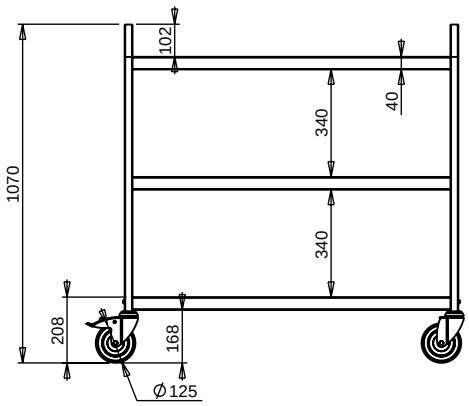

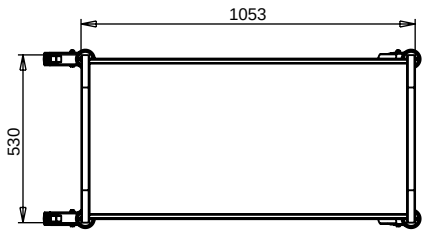

2023 © GASTRO PRODUCTION