TEFCOLD®

COOL PRODUCTS WORLDWIDE

INSTRUCTION MANUAL

Commercial Refrigerator & Freezer



FREEZER: LGF2500
LGF5000

REFRIGERATOR: LGC2500
LGC5000 LGC7500

Please read the user’ s manual before you use this product.
If you request unnecessary services, you may waste money.
Thus, fix simple troubles by yourself which you have found.



Content:

1.Preface.....2
2.Use of the equipment.....5
3.Technical features.....5
4.Operation.....5
5.Control unit.....6
6.Handling.....6
7.Installation procedure.....7
8.Connecting to the main power supply.....7
9.Maintenance instructions.....8
Cleaning.....8
Cleaning the refrigerator surface.....8
Cleaning the inside of the refrigerator.....9
Cleaning the condenser.....9
10.Troubleshooting.....9
11.Technical service.....9
12.Configuration Sketch Map.....10

Operating Instruction.....10
Technical Parameters.....16
Correct disposal of this product.....17
Official Approval And Rules.....17



1. Preface

Please read instructions before using this appliance.

IMPORTANT SAFETY INSTRUCTION

▲ To reduce the risk of fire, electric shock, or injury to persons when using your product, basic safety precautions should be followed, including the following.

▲ This appliance must be properly installed and located in accordance with the Installation Instruction before it is used.

▲ Before the appliance is plugged in, ensure that the rated voltage corresponds to the voltage of the electrical system in your home. The power plug should have its own independent socket. Using adapters may cause overheating or burning.

▲ This appliance can be used by children aged from 8 years and above and persons with reduced physical, sensory or mental capabilities or lack of experience and knowledge if they have been given supervision or instruction concerning use of the appliance in a safe way and understand the hazards involved.

▲ Children shall not play with the appliance.

▲ Cleaning and user maintenance shall not be made by children without supervision.

▲ If the supply cord is damaged, it must be replaced by the manufacturer or its service agent or a similarly qualified person in order to avoid a hazard.

▲ Connect to properly grounded outlets only. Avoid the use of extension cords. Do not run cord under carpeting, runners or the like. Arrange cord away from traffic area and where it will not create a tripping hazard.

▲ Always unplug appliance when not in use and before cleaning, adjusting or maintaining this machine. To disconnect appliance, turn switch off and remove plug from power source.



▲ Do not disconnect by pulling on the cord. Always disconnect by grasping and pulling on the plug top.

▲ Do not pull out the cord or touch the power plug with wet hands. Clean water or dust from the power plug and insert it with the ends of the pins securely connected.

▲ Do not use outdoors.

▲ Do not splash water on the appliance. It may cause a malfunction or electric shock.

▲ Do not disassemble, repair or alter the appliance. It may cause fire or abnormal operations, which may lead to injury.

▲ After your fridge-freezer is in operation, do not touch the cold surfaces in the freezer compartment, particularly when hands are damp or wet. Skin may adhere to these extremely cold surfaces.

▲ Never place glass products in the freezer because they may be broken when their inner contents are frozen.

▲ The refrigerant and insulation blowing gas used in the appliance require special disposal procedures. When disposal, please consult with service agent or a similarly qualified person.

▲ Do not store explosive substances such as aerosol cans with a flammable propellant in this appliance.

▲ WARNING: Keep clear of obstruction all ventilation openings in the appliance enclosure or in the structure for building-in.

▲ WARNING: Do not use mechanical devices or other means to accelerate the defrosting process, other than those recommended by the manufacturer.

▲ WARNING: Do not damage the refrigerant circuit.

▲ WARNING: Do not use electrical appliances inside the food storage compartments of the appliance, unless they are of the type recommended by the manufacturer.

▲If the LED lamp needs to be replaced, it must be replaced by the manufacturer or its service agent or a similarly qualified person in order to avoid a hazard.





Warning: Risk of fire / flammable materials

CAUTION: RISK OF FIRE AND EXPLOSION WITH FLAMMABLE REFRIGERANT R290 or R600a.

▲ If you need the electronic version instruction manual, please ask the manufacturer or its service agent .

▲ Max. Load of shelf is 70KG.

This instruction manual provides all the necessary information regarding:

▲ use of the refrigerator

▲ technical specifications

▲ installation and handling

▲ operator procedures and instructions

▲ maintenance operation

The manual is to be considered an integral part of the refrigerator and should be stored in a safe place for father consult to permit a good working life of the refrigerator.

The appliance is intended for commercial use only.

■ Component parts shall be replaced with like components and that servicing shall be done by factory authorized service personnel.

The A-weighted emission sound pressure level is below 70 dB(A)

The manufacturer cannot be held liable in the following cases:

■ improper installation (not in accordance with the guidelines indicated herein)

■ misuse of the refrigerator

■ power supply defects

■ improper or inadequate maintenance

■ unauthorised modification or tampering

■ use of non-original spare parts

■ partial or total failure to comply with the instructions

All electrical equipment can be hazardous to health. Current standards and legal requirements must be complied with during the installation and use of any equipment.



2. Use of the equipment

The refrigerator are for preserving fresh perishable foodstuffs, with an in-built refrigerated unit.

Do not utilise the equipment to store medical supplies.

Climate class of the equipments is 4 or 5.

The optimum operational ambient temperatures are between +10℃ to +43℃.

This equipment is intended for the storage and display of packaged products only.

3. Technical features

The refrigerator is a ventilated system, the evaporator is in a separate insulated box on the top. All the materials used in the manufacture of this unit are guaranteed to be suitable for use with foodstuffs. The gases used in produces is R290 or R600a..The refrigerating circuit are in compliance with the current normative.

4. Operation

The gas in the refrigerating circuit is in the first time compressed, liquefied and then evaporated in the ventilated evaporator, situated on the top of the container.

This cycle involves the absorption of heath from the air in the refrigerator compartment and the reason is cooled. The heat produced is then dissipated to the outside environment by a condenser unit located on the top of the refrigerator.



5. Control unit

The refrigerator is command from a “digital control unit” and a “main switch pilot light” in the top panel of the refrigerator.

The “main switch pilot light” is for turning on the power supply.

The red pilot light comes on to indicate that the unit is connected to the main electricity and to start work.

The red pilot light comes off to indicate that the unit is disconnected and don’ t work. The “digital control unit” is for the regulation of all parameters to provide the correct working of the refrigerator. Please consult all parameters in the attachment manual of the “digital control unit”.

This manual is part of the instruction manual and is very important in case of service.

Applied refrigerant belong to non-flammable refrigerant.

6. Handling

The refrigerator arrive in PET film and packed in cardboard box on a wood pallet.

The refrigerator must be transported and handled with care to avoid posing a hazard to persons or property.

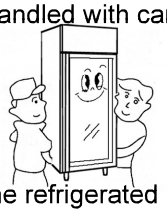

Never place a refrigerator with an in-built refrigerated unit on its side or turn it upside down as this may damage or impair operation of the refrigerated unit.

We can not held liable for any damage or defects arising directly or indirectly from improper handling of the equipment or non-compliance with the safeguards illustrated above.



7. Installation procedure

▲ Place the refrigerator in the coolest and best ventilated part of the room. Don’ t install the refrigerator in the near of heat and direct sunlight sources.

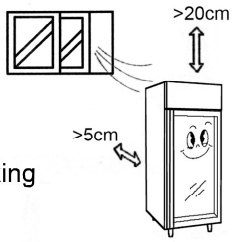

▲Remove the straps securing the cardboard packing

Remove the cardboard. Covering

Remove the PET protection film

▲Clean the refrigerator with mild detergent and then dry it with a soft cloth.

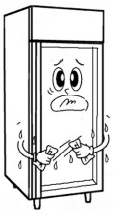

8. Connecting to the main power supply

This operation must be carried out by professionally and qualified persons.

The refrigerator are supplied complete with a power supply cable for the connection to the main power supply. A thermomagnetic circuit breaker (not supplied) must be installed between the mains power point and the power supply cable of the refrigerator.

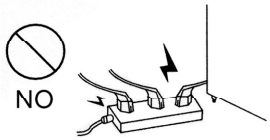

Before proceeding make sure that:

▲ the mains voltage corresponds to the voltage on the refrigerator 220-240V/50Hz/1Ph; to ensure proper operation it is essential for the power supply voltage to come within a range of +/- 6% of the unit’s rated voltage

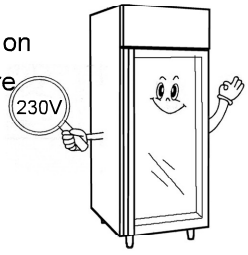



▲ the electric system to which the refrigerator is sized to cater for the rated electric output of the buffet unit being installed
▲ the electronic system to which the refrigerator is connected is made in compliance with current standard requirements
▲ the electric connections and the installation of the thermomagnetic circuit breaker have been done by qualified person.

Connecting steps:

▲ Install a thermomagnetic circuit breaker suited to the rated output of the unit being installed
▲ Connect the refrigerator unit to the thermomagnetic circuit breaker outlet
▲ Check that the refrigerator is in order as demonstrated by the pilot light incorporated in the main switch coming on

9. Maintenance instructions

The smooth operation and life of the equipment are mainly determined by correct and regular maintenance

Cleaning:

Regular cleaning of the refrigerator unit is strongly recommended each month. Please follow the instructions below.

Disconnect the refrigerator power supply cable from the mains prior to carrying out any type of cleaning operation.

Cleaning the refrigerator surface:

Clean the refrigerator with mild detergent and then dry it with a soft cloth.
Do not use abrasive detergents!

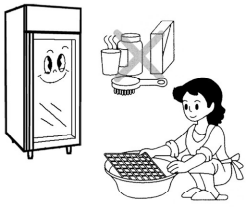



Cleaning the inside of the refrigerator:

Clean the inside area min. each month with a detergent suitable for use with foodstuffs.

Cleaning the condenser:

For an efficient operation of the refrigerator it is advisable to clean the condenser regularly approx. every 4 months with a dry brush or vacuum cleaner.

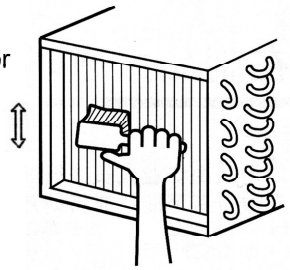

10. Troubleshooting

Refrigerator stops working (light off):

☆ Power supply failure

▲ Remedies:

☆ Check that the plug is inserted properly in the socket

☆ Check that the switch on/off

☆ Check that the mains voltage powers the plug

Refrigerator temperature go up:

☆ Unit to near to a heat source

☆ Condenser dirty or close

▲ Remedies:

☆ Move the counter or the heat source further away

☆ Clean the condenser

When replace the lamp,please turn off the power,and remove the screw of the lampshade with a screwdriver and replace the broken bulb with a new one which applys the same electrical parameter.

11. Technical service

For technical service please contact the dealer technical department and give him the serial n°, and the date of buy.



12. Configuration Sketch Map

T Serise Reach-Ins

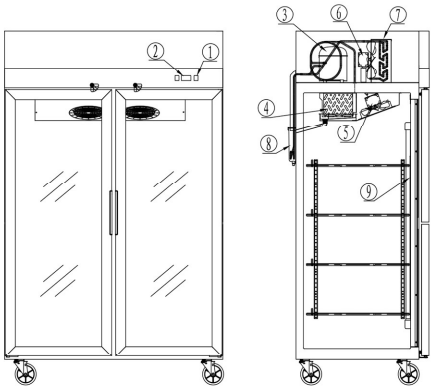

B Serise Reach-Ins

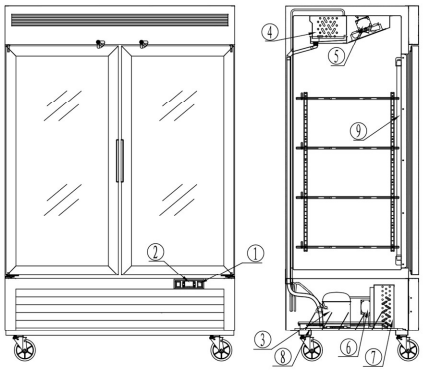

1. Power switch
2. Microcomputer controller
3. Compressor
4. Evaporator
5. Evaporator fan
6. Condenser fan
7. Condenser
8. Downcomer for condensing water
9. Lamp

Operating Instruction



1. New upright air-cooling refrigerator should be opened and ventilate it before it is in use. After that, users should use warm water clean its inside.
2. After connecting the power supply, press the "POWER" switch on the controller keyboard (Green Indicator Light ON), the fridge will come to work. The microcomputer controller, installed in the controller keyboard, could automatically adjust the temperature ranges. This intelligent digital controller works as: if the temperature increases and reaches set point plus differential the compressor is started and then turned off when the temperature reaches the set point value again.



3.Microcomputer Controller Operation Instruction:

Display and functions:



During normal operation, the controller displays the value of the probe set using parameter/4(=1 ambient probe, default,=2 second probe, =3 third probe).In addition, the display has LEDs that indicate the activation of the control functions(see Table 1), while the 3 buttons can be used to activate/deactivate some of the functions (see table 2). LEDs and associated functions Tab.1

icon	function	normal operation			start up
		ON	OFF	blink	
	Compressor	on	off	request	ON
	fan	on	off	request	ON
	defrost	on	off	request	ON
AUX	aux	output on	output off	-	ON
	alarm	all	no alarm	-	ON
	clock	RTC fitted and enabled,at least 1 time band set	RTC not fitted or disabled,not even 1 time band set	-	ON if RTC fitted

Table of functions activated by the buttons Tab.2

button		normal operation		start up	
		pressing the button alone	pressed together		
	up ON/OFF	more than 3s toggle ON/OFF	pressed together start/ stop continuous cycle	-	
	down defrost	more than 3s: start/stop defrost		Pressed together start parameter reset procedure	for 1s display firmware vers. code
set mute	set mute	-1s: display/set the set point -more than 3s: access parameter setting menu(enter password 22) -mute audible alarm (buzzer)	-		for 1s RESET current EZY set



Setting the set point(desired temperature)

- press SET for 1s the set value will start flashing after a few moments;
- increase or decrease the value using UP or DOWN;
- press SET to confirm the new value.

Switching the device ON/OFF

Press UP for more than 3s. the control and defrost algorithms are now disabled and the instrument displays the message “OFF” alternating with the temperature read by the set probe.

Manual defrost

Press for DOWN more than 3s (the defrost starts only the temperature c onditions are valid).

Continuous cycle

Press UP and DOWN together for more than 3s.

Table of alarms

Alam code	buzzer and alarm relay	LED	Description	Parametri coninvolti
E0	active	ON	probe 1 error=control	-
E1	inactive	ON	probe 2 error=defrost	[d0=0/1]
E2	inactive	ON	probe 3 error=condenser	[A4=10]
IA	active	ON	external alarm	[A4=10][+A7]
dOr	active	ON	open door alarm	[A4=7/8][+A7]
LO	active	ON	low temperature alarm	[AL][Ad]
HI	active	ON	high temperature alarm	[Ah][Ad]
EE	inactive	ON	unit parameter error	-
EF	inactive	ON	operating parameter error	-
Ed	inactive	ON	defrost ended by timeout	[dP][dt][d4][A8]
dF	inactive	ON	defrost running	[d6=0]
cht	inactive	ON	condenser dirty pre-alarm	[A4=10]
CHT	active	ON	condenser dirty alarm	[A4=10]
EtC	inactive	ON	clock alarm	

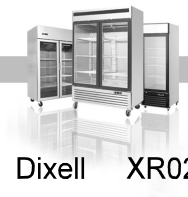

Dixell XR02CX XR03CX XR06CX

1. Microcomputer panel sketch map, meanings of running indicator light and LED showing.



(Mod. XR06CX)

2. SET To display target set point, in programming mode it selects a parameter or confirm an operation.

❄ To start a manual defrost。

∧ In programming mode it browses the parameter codes or increases the displayed value .

∨AUX In programming mode it browses the parameter codes or decreases the displayed value .

∨+∧ To lock or unlock the keyboard

SET+∨ To enter in programming mode

SET+∧ To return to room temperature display .

LED	MODE	SIGNIFICATO
❄	On	Compressor enabled
	Flashing	Anti short cycle delay enabled (AC parameter)
❄	On	Defrost in progress
	Flashing	Dripping in progress
	On	Fans output enabled
	Flashing	Fans delay after defrost
°C	On	Measurement unit
	Flashing	Programming mode
°F	On	Measurement unit
	Flashing	Programming mode

3. How to see the point .

Push and immediately release the SET key, the set point will be showed;
Push and immediately release the SET key or wait about 5s to return to normal visualisation.

4. How to change the setpoint .

Push the SET key for more than 2 seconds to change the Set point value;
The value of the set point will be displayed and the "°C" or "°F" LED starts blinking;
To change the Set value push the ∧ or ∨AUX arrows.
To memorise the new set point value push the SET key again or wait 10s.

5. How to start a manual defrost .

Push the DEF ❄ key for more than 2 seconds and a manual defrost will start .



6. How to change a parameter value

   To change the parameter's value operate as follows:

   Enter the Programming mode by pressing the SET+▽ keys for 3s ("°C" or "°F" LED starts blinking).

   Select the required parameter. Press the "SET" key to display its value

   Use △ or ▽AUX to change its value.

   Press "SET" to store the new value and move to the following parameter.

   To exit: Press SET+△ or wait 15s without pressing a key.

   NOTE: the set value is stored even when the procedure is exited by waiting the time-out to expire.

7. To lock the keyboard .

   Keep pressed for more than 3s the ▽+△ keys.

   The "OF" message will be displayed and the keyboard will be locked.

   If a key is pressed more than 3s the "OF" message will be displayed.

8. To unlock the keyboard .

   Keep pressed together for more than 3s the ▽+△ keys till the "on" message will be displayed .

9. Alarm signalling .

Mess.	Cause	Outputs
"P1"	Room probe failure	Compressor output according to "Cy" e "Cn"
"P2"	Evaporator probe failure	Defrost end is timed
"HA"	Maximum temperature alarm	Outputs unchanged
"LA"	Minimum temperature alarm	Outputs unchanged
"EA"	External alarm	Outputs unchanged
"CA"	Serious external alarm	All outputs OFF
"dA"	Door Open	Compressor and fans restarts



Our products have been modified precisely before leaving factory, so to avoid damaging compressor unit or other malfunctions, users mustn’ t modify the microcomputer parameters privately.



Technical Parameters

B Series Reach-Ins

Model code	Power source (V)	Rating frequency(Hz)	Input power (w)	Rated current(A)	Temperature range (℃)	Refrigerant	Amount(g)	Dimension (mm)	Volume (L)
LGF2500	220~240	50	750	4.4	-20~-17	R290	120	685×800×2062	610
LGF5000	220~240	50	1100	5.3	-20~-17	R290	150	1382×800×2062	1335
LGC2500	220~240	50	280	1.3	1~8	R600a	110	685×800×2062	610
LGC5000	220~240	50	350	1.6	1~8	R290	120	1382×800×2062	1335
LGC7500	220~240	50	450	2.1	1~8	R290	150	2079×800×2062	2050

NOTES :If the technical data has any changes, we will not notify you any longer.



OFFICIAL APPROVAL AND RULES

Our products full fill the present E.U. rules, including the CE mark of the European official approval

Latest version of following directives and standards

2006/42/EC	2014/30/EU
2012/19/EU	2011/65/EU
EN 60335-1	EN 60335-2-89
EN 62233	EN 55014-1
EN 61000-3-2	EN 61000-3-3
EN 55014-2	

CE

CORRECT DISPOSAL OF THIS PRODUCT

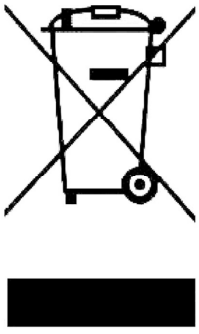

This marking indicates that this product should not be disposed with other household wastes throughout the EU. To prevent possible harm to the environment or human health from uncontrolled waste disposal, recycle it responsibly to promote the sustainable reuse of material resources. To return your used device, please use the return and collection systems or contact the retailer where the product was purchased. They can take this product for environmental safe recycling.

W081106615
version number 20191126