# 2 COOK LINE

## 00930040 2.1 FREEZER ZF130 BK
## Dim. : 830[W] x 650[D] x 840[H]

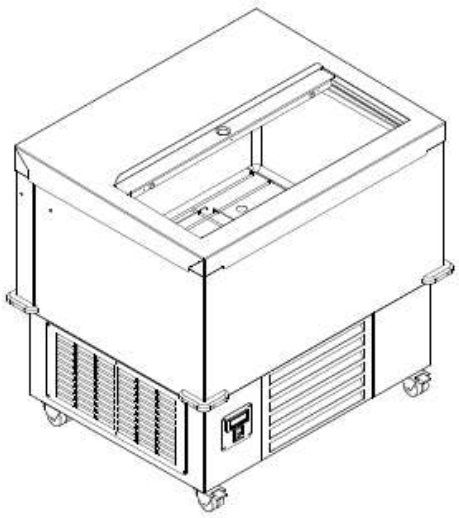

### Technical specification

| |
|---|
| • Voltage 230[V]/1N~16[A][50Hz] |
| • Plug 230V/16A uni-schuko |
| • Power 400[W] |
| • Full load amps 1.95[A] |
| • Operating temperature -18-20[°C] |
| • Chamber capacity 130[l] |
| • Weight 94[kg] |
| • Front castors with brakes |
| **Unit equipped with:** |
| • Sliding doors |
| • Cable reel |
| • Corner bumpers |
| • Removable condenser cover |
| **Not included:** |
| • Rack **#00937144** for fry baskets |

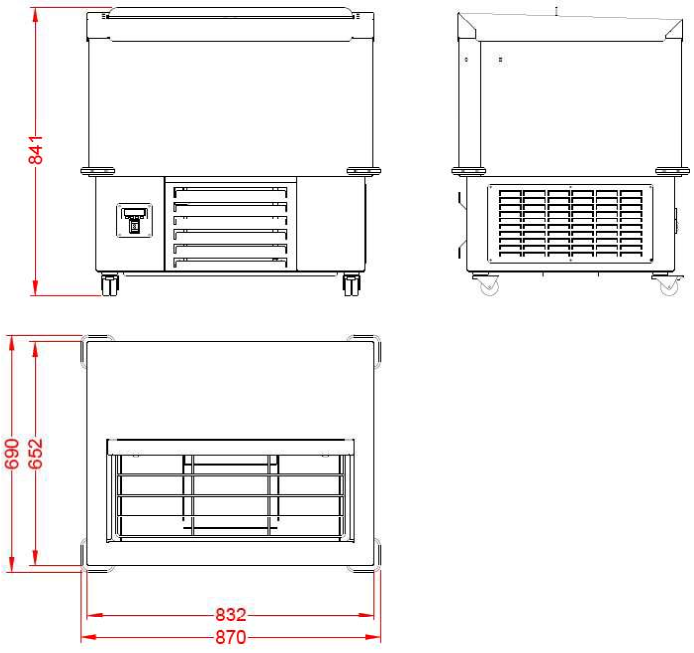




FOLLETT EUROPE POLSKA Sp. z o.o.
83-021 Wiślina, Mokry Dwór 26c,
tel/fax: (058) 78 56 140/159
www.folletteurope.com